INSTALLATION MANUAL

VRV System air conditioner

English

Français

Español

MODEL

REYQ72XATJU	**REYQ72XAYDU**	**REYQ72XAYCU**
REYQ96XATJU	**REYQ96XAYDU**	**REYQ96XAYCU**
REYQ120XATJU	**REYQ120XAYDU**	**REYQ120XAYCU**
REYQ144XATJU	**REYQ144XAYDU**	**REYQ144XAYCU**
REYQ168XATJU	**REYQ168XAYDU**	**REYQ168XAYCU**
REYQ192XATJU	**REYQ192XAYDU**	**REYQ192XAYCU**
REYQ216XATJU	**REYQ216XAYDU**	**REYQ216XAYCU**
REYQ240XATJU	**REYQ240XAYDU**	**REYQ240XAYCU**
REYQ264XATJU	**REYQ264XAYDU**	**REYQ264XAYCU**
REYQ288XATJU	**REYQ288XAYDU**	**REYQ288XAYCU**
REYQ312XATJU	**REYQ312XAYDU**	**REYQ312XAYCU**
REYQ336XATJU	**REYQ336XAYDU**	**REYQ336XAYCU**
REYQ360XATJU	**REYQ360XAYDU**	**REYQ360XAYCU**
REYQ384XATJU	**REYQ384XAYDU**	**REYQ384XAYCU**
REYQ408XATJU	**REYQ408XAYDU**	**REYQ408XAYCU**
REYQ432XATJU	**REYQ432XAYDU**	**REYQ432XAYCU**
REYQ456XATJU	**REYQ456XAYDU**	

Please visit http://www.daikinac.com/content/resources/manuals for the most current version of installation instructions. In the event of conflicting information, the online installation instruction is to be used.

Veuillez visiter http://www.daikinac.com/content/resources/manuals pour obtenir la version la plus récente des instructions d'installation. En cas de conflit d'informations, les instructions d'installation en ligne doivent être utilisées.

Visite http://www.daikinac.com/content/resources/manuals para obtener la versión más actualizada de las instrucciones de instalación. En caso de información conflictiva, se debe utilizar la instrucción de instalación en línea.

3P477778-7G

Safety considerations

Read these Safety considerations for Installation carefully before installing an air conditioner or heat pump. After completing the installation, make sure that the unit operates properly during the startup operation.
Instruct the customer on how to operate and maintain the unit.
Inform customers that they should store this Installation Manual with the Operation Manual for future reference.
Always use a licensed installer or contractor to install this product.
Improper installation can result in water or refrigerant leakage, electrical shock, fire, or explosion.
Meanings of **DANGER**, **WARNING**, **CAUTION**, and **NOTE** Symbols:

⚠ **DANGER** . . . . . Indicates an imminently hazardous situation which, if not avoided, will result in death or serious injury.

⚠ **WARNING** . . . . . Indicates a potentially hazardous situation which, if not avoided, could result in death or serious injury.

⚠ **CAUTION** . . . . . Indicates a potentially hazardous situation which, if not avoided, may result in minor or moderate injury. It may also be used to alert against unsafe practices.

⚠ **NOTE** . . . . . Indicates situations that may result in equipment or property-damage accidents only.

INFORMATION . . . This symbol identifies useful tips or additional information.

⚠ DANGER

- Refrigerant gas is heavier than air and replaces oxygen. A massive leak will result in oxygen depletion, especially in basements, and an asphyxiation hazard will result in serious injury or death.
- Do not ground units to water pipes, gas pipes, telephone wires, or lightning rods as incomplete grounding will result a severe shock hazard resulting in severe injury or death. Additionally, grounding to gas pipes will result a gas leak and potential explosion resulting in severe injury or death.
- If refrigerant gas leaks during installation, ventilate the area immediately. Refrigerant gas will result in producing toxic gas if it comes into contact with fire. Exposure to this gas will result in severe injury or death.
- After completing the installation work, check that the refrigerant gas does not leak throughout the system.
- Do not install unit in an area where flammable materials are present due to risk of explosions that will result in serious injury or death.
- Safely dispose all packing and transportation materials in accordance with federal/state/local laws or ordinances. Packing materials such as nails and other metal or wood parts, including plastic packing materials used for transportation will result in injuries or death by suffocation.

⚠ WARNING

- Only qualified personnel must carry out the installation work. Installation must be done in accordance with this installation manual. Improper installation could result in water leakage, electric shock, or fire.
- When installing the unit in a small room, take measures to keep the refrigerant concentration from exceeding allowable safety limits. Excessive refrigerant leaks, in the event of an accident in a closed ambient space, could result in oxygen deficiency.
- Use only specified accessories and parts for installation work. Failure to use specified parts could result in water leakage, electric shocks, fire, or the unit falling.
- Install the air conditioner or heat pump on a foundation strong enough that it can withstand the weight of the unit. A foundation of insufficient strength could result in the unit falling and causing injuries.
- Take into account strong winds, typhoons, or earthquakes when installing. Improper installation could result in the unit falling and causing accidents.
- Make sure that a separate power supply circuit is provided for this unit and that all electrical work is carried out by qualified personnel according to local, state and national regulations. An insufficient power supply capacity or improper electrical construction could result in electric shocks or fire.
- Make sure that all wiring is secured, that specified wires are used, and that no external forces act on the terminal connections or wires. Improper connections or installation could result in fire.
- When wiring, position the wires so that the control box cover can be securely fastened. Improper positioning of the control box cover could result in electric shocks, fire, or the terminals overheating.
- Before touching electrical parts, turn off the unit.
- This equipment can be installed with a Ground-Fault Circuit Interrupter (GFCI). Although this is a recognized measure for additional protection, with the grounding system in North America, a dedicated GFCI is not necessary.
- Securely fasten the unit terminal cover (panel). If the terminal cover/panel is not installed properly, dust or water may enter the outdoor unit and could result in fire or electric shock.
- When installing or relocating the system, keep the refrigerant circuit free from substances other than the specified refrigerant (R410A) such as air. Any presence of air or other foreign substance in the refrigerant circuit could result in abnormal pressure rise or rupture, resulting in injury.
- Do not change the setting of the protection devices. If the pressure switch, thermal switch, or other protection device is shorted and operated forcibly, or parts other than those specified by Daikin are used, fire or explosion could result.

⚠ CAUTION

- Do not touch the switch with wet fingers. Touching a switch with wet fingers may result in electric shock.
- Do not allow children to play on or around the unit or it may result in injury.
- The heat exchanger fins are sharp enough to cut, and may result in injury if improperly used. To avoid injury wear glove or cover the fins when working around them.
- Do not touch the refrigerant pipes during and immediately after operation as the refrigerant pipes may be hot or cold, depending on the condition of the refrigerant flowing through the refrigerant piping, compressor, and other refrigerant cycle parts. It may result in your hands getting burns or frostbite if you touch the refrigerant pipes. To avoid injury, give the pipes time to return to normal temperature or, if you must touch them, be sure to wear proper gloves.
- Install drain piping to proper drainage. Improper drain piping may result in water leakage and property damage.
- Insulate piping to prevent condensation.
- Be careful when transporting the product.
- Do not turn off the power immediately after stopping operation. Always wait for at least 5 minutes before turning off the power. Otherwise, water leakage may result.
- Do not use a charging cylinder. Using a charging cylinder may cause the refrigerant to deteriorate.
- Refrigerant R410A in the system must be kept clean, dry, and tight.
  (a) Clean and Dry - Foreign materials (including mineral oils such as SUNISO oil or moisture) should be prevented from getting into the system.
  (b) Tight - R410A does not contain any chlorine, does not destroy the ozone layer, and does not reduce the earth's protection again harmful ultraviolet radiation. R410A can contribute to the greenhouse effect if it is released. Therefore take proper measures to check for the tightness of the refrigerant piping installation. Read the chapter Refrigerant Piping and follow the procedures.
- Since R410A is a blend, the required additional refrigerant must be charged in its liquid state. If the refrigerant is charged in a state of gas, its composition can change and the system will not work properly.
- The indoor unit is for R410A. See the catalog for indoor models that can be connected. Normal operation is not possible when connected to other units.
- Remote controller (wireless kit) transmitting distance can be shorter than expected in rooms with electronic fluorescent lamps (inverter or rapid start types). Install the indoor unit far away from fluorescent lamps as much as possible.
- Indoor units are for indoor installation only. Outdoor units can be installed either outdoors or indoors. This unit is for indoor use.
- Do not install the air conditioner or heat pump in the following locations:
  (a) Where a mineral oil mist or oil spray or vapor is produced, for example, in a kitchen.
  Plastic parts may deteriorate and fall off and thus may result in water leakage.
  (b) Where corrosive gas, such as sulfurous acid gas, is produced.
  Corroding copper pipes or soldered parts may result in refrigerant leakage.
  (c) Near machinery emitting electromagnetic waves. Electromagnetic waves may disturb the operation of the control system and cause the unit to malfunction.
  (d) Where flammable gas may leak, where there is carbon fiber, or ignitable dust suspension in the air, or where volatile flammables such as thinner or gasoline are handled. Operating the unit in such conditions may result in a fire.
- Take adequate measures to prevent the outdoor unit from being used as a shelter by small animals. Small animals making contact with electrical parts may result in malfunctions, smoke, or fire. Instruct the customer to keep the area around the unit clean.

⚠ NOTE

- Install the power supply and transmission wires for the indoor and outdoor units at least 3.5 ft. (1 m) away from televisions or radios to prevent image interference or noise. Depending on the radio waves, a distance of 3.5 ft. (1 m) may not be sufficient to eliminate the noise.
- Dismantling the unit, treatment of the refrigerant, oil and additional parts must be done in accordance with the relevant local, state, and national regulations.
- Do not use the following tools that are used with conventional refrigerants: gauge manifold, charge hose, gas leak detector, reverse flow check valve, refrigerant charge base, vacuum gauge, or refrigerant recovery equipment.
- If the conventional refrigerant and refrigerator oil are mixed in R410A, the refrigerant result in deterioration.
- This air conditioner or heat pump is an appliance that should not be accessible to the general public.
- As design pressure is 478 psi (3.3 MPa), the wall thickness of field-installed pipes should be selected in accordance with the relevant local, state, and national regulations.

Codes and Regulations

This product is designed and manufactured to comply with national codes. Installation in accordance with such codes and/or prevailing local codes/regulations is the responsibility of the installer. The manufacturer assumes no responsibility for equipment installed in violation of any codes or regulations. Rated performance is achieved after 72 hours of operation.

Make sure to use a DAIKIN specified checker while measuring sub cooling. Do not use the check valve or the other port to measure it.

CONTENTS

Safety considerations i
Codes and Regulations ii
1. Introduction 2
1.1. General information 2
1.2. Combinations and options 2
1.3. Indoor capacity range 3
1.4. Scope of the manual 3
2. Accessories 3
2.1. Accessories supplied with this unit 3
3. Overview of unit 4
3.1. Opening the unit 4
3.2. Technical and Electrical specifications 4
3.3. Main components 4
4. Selecting an installation location 4
4.1. General precautions on installation 4
4.2. Weather related precautions 5
4.3. Selecting a location in cold climates 5
5. Dimensions and service space 6
5.1. Dimensions of outdoor unit 6
5.2. Service space 6
6. Inspecting, handling and unpacking the unit 7
6.1. Inspection 7
6.2. Handling 7
6.3. Unpacking 7
6.4. Installing the unit 8
6.5. Method for removing shipping plates 8
6.6. Method for opening the sliding plate 9
7. Refrigerant pipe size and allowable pipe length 9
7.1. General information 9
7.2. Selection of piping material 9
7.3. Selection of piping size 9
7.4. Selection of refrigerant branch kits 10
7.5. System piping (length) limitations 11
8. Precautions on refrigerant piping 14
8.1. Caution for brazing 14
8.2. Connecting the refrigerant piping 14
8.3. Guidelines for handling stop valve 17
9. Field wiring 18
9.1. Power circuit, safety device and cable requirements 19
9.2. Wiring connection example for whole system 19
9.3. Leading wire procedure 19
9.4. Transmission wiring connection procedure 20
9.5. Power wiring connection procedure 21
9.6. Procedure for Wiring Inside Units 21
10. Air tight test and vacuum drying 22
11. Pipe insulation 23
12. Checking of device and installation conditions 24
13. Making field settings 24
13.1. Accessing the push buttons on the printed circuit board 24
13.2. Operating the push buttons and DIP switches on the printed circuit board 24
13.3. Connecting the PC configurator to the outdoor unit 26
14. Charging refrigerant 26
14.1. Precautions 26
14.2. Calculating the additional refrigerant charge 26
14.3. Method for adding refrigerant 28
15. Start-up and configuration 30
15.1. Checks before initial start up 30
15.2. Monitoring function and field settings 31
15.3. Energy saving and optimum operation 37
15.4. Test operation 39
15.5. Malfunction code list 40
16. Operation of the unit 43
17. Maintenance and service 43
17.1. Maintenance introduction 43
17.2. Service precautions 43
17.3. Service mode operation 45
18. Caution for refrigerant leaks 45
18.1. Introduction 45
19. Disposal requirements 45

The original instructions are written in English. All other languages are translations of the original instructions.

1. Introduction

1.1. General information

This installation manual concerns the VRV REYQ-X series, full inverter driven, heat pump system.

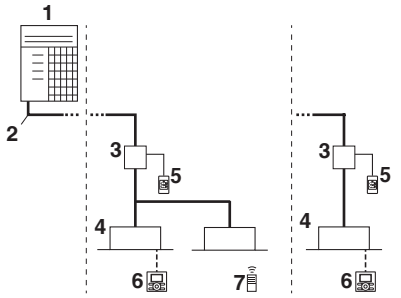

1 Outdoor unit
2 Refrigerant piping
3 Branch Selector unit
4 VRV indoor unit
5 Cool/Heat selector (single Branch Selector unit only)
6 User interface (dedicated depending on indoor unit type)
7 User interface (wireless, dedicated depending on indoor unit type)

INFORMATION

Not all combinations of indoor units are allowed. For guidance, see 1.2. Combinations and options.

1.2. Combinations and options

The VRV REYQ-X series heat recovery system can be combined with several types of indoor units and is intended for R410A use only.

For an overview which units are available you can consult the product catalogue for VRV REYQ-X series.

NOTE

To be sure your system setup (outdoor unit + Branch Selector unit(s) + indoor unit(s)) will work, you have to consult the latest technical engineering data for VRV REYQ-X series.

An overview is given indicating the allowed combinations of indoor units and outdoor units. Not all combinations are allowed. They are subject to rules (combination between outdoor-indoor, single outdoor unit use, multiple outdoor units use, combinations between indoor units, etc.) mentioned in the technical engineering data.
The Branch Selector units that combined with REYQ-X units for changing the refrigerant flow to indoor units are T type (BSQ-TVJ, BS-Q54TVJ) only. Do not combine the T type and P type (BSVQ-PVJU, BSV-Q36PVJU) in the system. Combination of T type and P type cause malfunction.

1.2.1. Indoor units combinations

In general VRV indoor units can be connected to REYQ-X units.

1.2.2. Outdoor units combinations

Combination for REYQ-X units are as indicated in tables right, where REYQ 144-456 consists of multiple REYQ 96-120 single modules as indicated.

	72	96	120	144	168
REYQ72XATJU/XAYDU/XAYCU	1				
REYQ96XATJU/XAYDU/XAYCU		1			
REYQ120XATJU/XAYDU/XAYCU			1		
REYQ144XATJU/XAYDU/XAYCU				1	
REYQ168XATJU/XAYDU/XAYCU					1
REYQ192XATJU/XAYDU/XAYCU		2			
REYQ216XATJU/XAYDU/XAYCU		1	1		
REYQ240XATJU/XAYDU/XAYCU			2		
REYQ264XATJU/XAYDU/XAYCU			1	1	
REYQ288XATJU/XAYDU/XAYCU				2	
REYQ312XATJU/XAYDU/XAYCU				1	1
REYQ336XATJU/XAYDU/XAYCU					2
REYQ360XATJU/XAYDU/XAYCU			3		
REYQ384XATJU/XAYDU/XAYCU			2	1	
REYQ408XATJU/XAYDU/XAYCU			1	2	
REYQ432XATJU/XAYDU/XAYCU				3	
REYQ456XATJU/XAYDU				2	1

To install the outdoor unit, the following accessory parts are also required.

1 Refrigerant branch kit.

Description	Model name	
	(for 3 pipes)	(for 2 pipes)
REFNET header	KHRP25M33H9 KHRP25M33HA	KHRP26M22H9 KHRP26M22HA
	KHRP25M72H9 KHRP25M72HA	KHRP26M33H9 KHRP26M33HA
	KHRP25M73HU9 KHRP25M73HUA	KHRP26M72H9 KHRP26M72HA
REFNET joint	KHRP25A22T9 KHRP25A22TA	KHRP26A22T9 KHRP26A22TA
	KHRP25A33T9 KHRP25A33TA	KHRP26A33T9 KHRP26A33TA
	KHRP25M72TU9 KHRP25M72TUA	KHRP26M72TU9 KHRP26M72TUA
	KHRP25M73TU9 KHRP25M73TUA	–

For the selection of the optimal branch kit, refer to 7.4. Selection of refrigerant branch kits on page 10.

2 Outdoor unit multi connection piping kit.

Number of outdoor units connected	
2	3
BHFP26P100U BHFP26P100UA	BHFP26P151U BHFP26P151UA

3 In order to control the cooling or heating operation from a central location, the following option can be connected:
- Cool/Heat selector: KRC19-26A
- With optional fixing box for the switch: KJB111A
- Centralized control devices (e.g., intelligent Touch Manager)

4 To instruct specific operation with an external input coming from a central control the external control adaptor (DTA104A61/62) can be used. Instructions (group or individual) can be instructed for low noise operation and power consumption limitation operation.

5 For REYQ-X units it is also possible to make several commissioning field settings through a personal computer interface. For this option 999482P3 is required which is a dedicated cable to communicate with the outdoor unit. The software for the user interface program can be obtained from your local Daikin sales office.

INFORMATION

Refer to the technical engineering data for the latest option names.

1.3. Indoor capacity range

1.3.1. Connection Ratio

Connection Ratio = Total capacity index of the indoor units / Capacity index of the outdoor units

Type	Min. connection ratio
	Types of connected outdoor units
	REYQ-X type
Single outdoor units	50% (*1)
Double outdoor units	
Triple outdoor units	

*1. 70% : REYQ72X type

Type	Max. connection ratio				
	Types of connected indoor units			Types of connected air treatment	
	When using only FXDQ, FXMQ-PB, FXAQ, FXSQ07-54 TA	When using at least one FXZQ05 TA, FXSQ05 TA, FXFQ07/09	When using other indoor unit models	FXMQ-MF	
				When FXMQ-MF is only connected	When FXMQ-MF and indoor units are connected
Single outdoor unit	200% *1	180% *1	200% *1	100%	100% *2
Double outdoor units		160% *1	160% *1		
Triple outdoor units		130% *1	130% *1		

Notes: *1. If the operational capacity of indoor units is more than 130%, low airflow operation is enforced in all the indoor units.

*2. When outdoor-air processing units (FXMQ-MF) and standard indoor units are connected, the total connection capacity of the outdoor-air processing units (FXMQ-MF) must not exceed 30% of the capacity index of the outdoor units. And the connection ratio must not exceed 100%.

1.3.2. Outdoor Unit Combinations

Total capacity of indoor units needs to be within the specified range.

REYQ-X type

<Outdoor unit>	<Total capacity index of indoor units>
REYQ72XATJU/XAYDU/XAYCU	51-93
REYQ96XATJU/XAYDU/XAYCU	48-124
REYQ120XATJU/XAYDU/XAYCU	60-156
REYQ144XATJU/XAYDU/XAYCU	72-187
REYQ168XATJU/XAYDU/XAYCU	82-218
REYQ192XATJU/XAYDU/XAYCU	96-249
REYQ216XATJU/XAYDU/XAYCU	108-280
REYQ240XATJU/XAYDU/XAYCU	120-312
REYQ264XATJU/XAYDU/XAYCU	132-343
REYQ288XATJU/XAYDU/XAYCU	144-374
REYQ312XATJU/XAYDU/XAYCU	156-405
REYQ336XATJU/XAYDU/XAYCU	168-436
REYQ360XATJU/XAYDU/XAYCU	180-468
REYQ384XATJU/XAYDU/XAYCU	192-499
REYQ408XATJU/XAYDU/XAYCU	204-530
REYQ432XATJU/XAYDU/XAYCU	216-561
REYQ456XATJU/XAYDU	228-592

NOTE

Higher capacity than the above table can be selected, this may affect heating and cooling capacity. For additional information see technical engineering data.

1.4. Scope of the manual

This manual describes the procedures for handling, installing and connecting the VRV REYQ-X series outdoor units. This manual has been prepared to ensure adequate maintenance of the unit, and it will provide help in case problems occur.

INFORMATION

The installation of the indoor unit(s) is described in the indoor unit installation manual provided with the indoor unit(s).

2. Accessories

2.1. Accessories supplied with this unit

Confirm the following accessories are included. The storage location of the accessories is shown in the figure below.

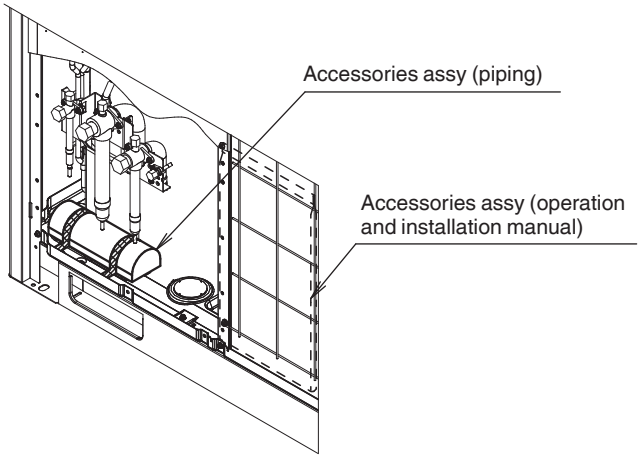

NOTE

Do not throw away any of the accessories until installation is complete. They are needed for installation work.

Name	Clamp (1)	Clamp (2)	Clamp (3)	Vinyl tube	Manuals, etc.
Quantity	7 pcs.	1 pc.	1 pc.	5 pcs.	1 pc. each
Shape	(Small)	(Large)			• Operation Manual • Installation Manual • REQUEST FOR THE INDICATION label (Installation records)

Name	Liquid side accessory pipe (1)	Liquid side accessory pipe (2)	Gas side accessory pipe (1)	Gas side accessory pipe (2)
Quantity	1 pc.	1 pc.	1 pc.	1 pc.
Shape		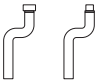 72-144X 168X	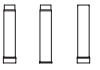 72,120X 96X 144,168X	72X 120X 96,144,168X

Name	High and low gas side accessory pipe (1)	High and low gas side accessory pipe (2)	L type accessory joint
Quantity	1 pc.	1 pc.	2 pcs.
Shape	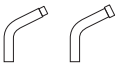 72X 96-168X	72,96X 120-168X	

3. Overview of unit

3.1. Opening the unit

To gain access to the unit, front panels need to be opened as follows:

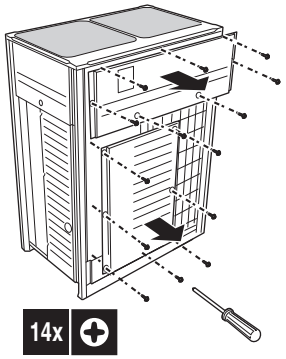

Once the front panel open, the control box can be accessed by removing the control box cover as follows.

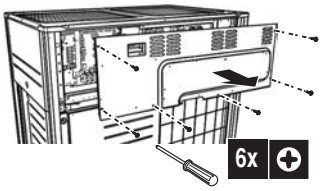

For service purposes, the push buttons on the main printed circuit board need to be accessed. To access these push buttons, the control box cover does not need to be opened. See 13. Making field settings on page 24.

⚠ DANGER: ELECTRICAL SHOCK

See Safety considerations on page i.

⚠ DANGER: DO NOT TOUCH PIPING AND INTERNAL PARTS

See Safety considerations on page i.

3.2. Technical and Electrical specifications

Refer to the Engineering Data Book for the complete list of specifications.

3.3. Main components

For main components and function of the main components, refer to the Engineering Data Book.

4. Selecting an installation location

⚠ WARNING

Be sure to provide for adequate measures in order to prevent that the unit is used as a shelter by small animals.
Small animals making contact with electrical parts can cause malfunctions, smoke or fire. Please instruct the customer to keep the area around the unit clean and clear.
In a domestic environment this product may cause radio interference in which case the user may be required to take adequate measures.

⚠ CAUTION

Appliance not accessible to the general public, install it in a secured area, protected from easy access.
This unit, both indoor and outdoor, is suitable for installation in a commercial and light industrial environment.

4.1. General precautions on installation

Select an installation site that meets the following requirements:

- The foundation must be strong enough to support the weight of the unit.
- Installation location is flat to prevent vibrations and noise generation and to have sufficient stability.
- The space around the unit is adequate for maintenance and servicing (refer to 5.2. Service space on page 6).
- The space around the unit allows for sufficient air circulation.
- There is no danger of fire due to leakage of inflammable gas.
- The equipment is not intended for use in a potentially explosive atmosphere.
- Select the location of the unit in such a way that the sound generated by the unit does not disturb anyone, and the location is selected according the applicable legislation.
- All piping lengths and distances have been taken into consideration (refer to 7.5. System piping (length) limitations on page 11).
- Take care that in the event of a water leak, water cannot cause any damage to the installation space and surroundings.
- When installing the unit in a small room, take measures in order to keep the refrigerant concentration from exceeding allowable safety limits in the event of a refrigerant leak, refer to 18. Caution for refrigerant leaks on page 45.

⚠ CAUTION

Excessive refrigerant concentrations in a closed room can lead to oxygen deficiency.

⚠ NOTE

The equipment described in this manual may cause electronic noise generated from radio-frequency energy. The equipment complies to specifications that are designed to provide reasonable protection against such interference. However, there is no guarantee that interference will not occur in a particular installation.
It is therefore recommended to install the equipment and electric wires keeping proper distances away from stereo equipment, personal computers, etc

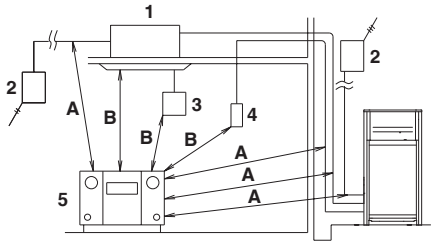

1 Indoor unit
2 Branch switch, overcurrent breaker
3 Remote controller
4 Cool/Heat selector
5 Personal computer or radio
A ≥60 in. (1500 mm)
B ≥40 in. (1000 mm)

An inverter air conditioner may cause electronic noise generated from AM broadcasting. Examine where to install the main air conditioner and electric wires, keeping proper distances away from stereo equipment, personal computers, etc.
Particularly for locations with weak reception, ensure there is a distance of at least 10 ft. (3 m) for indoor remote controllers, place power wiring and transmission wiring in conduits, and ground the conduits.

- The refrigerant R410A itself is nontoxic, non-flammable and is safe. If the refrigerant should leak however, its concentration may exceed the allowable limit depending on room size. Due to this, it could be necessary to take measures against leakage. Refer to 18. Caution for refrigerant leaks on page 45.
- Do not install in the following locations:
  - Locations where sulfurous acids and other corrosive gases may be present in the atmosphere. Copper piping and soldered joints may corrode, causing refrigerant to leak.
  - Locations where a mineral oil mist, spray or vapor may be present in the atmosphere. Plastic parts may deteriorate and fall off or cause water leakage.
  - Locations where equipment that produces electromagnetic waves is found. The electromagnetic waves may cause the control system to malfunction, preventing normal operation.
  - Locations where flammable gases may leak, where thinner, gasoline and other volatile substances are handled, or where carbon dust and other incendiary substances are found in the atmosphere. Leaked gas may accumulate around the unit, causing an explosion.
- When installing, take strong winds, hurricanes or earthquakes into account, improper installation may result in the unit turning over.

4.2. Weather related precautions

- Be sure that the air inlet of the unit is not positioned towards the main wind direction. Frontal wind will disturb the operation of the unit. If necessary, use a screen to block the wind.
- Ensure that water cannot cause any damage to the location by adding water drains to the foundation and prevent water traps in the construction.
- When installing in areas where air contains high levels of salt such as near the ocean; Contact your Daikin sales representative for additional precautions.

4.3. Selecting a location in cold climates

⚠ NOTE

- When operating the unit in a low outdoor ambient temperature, be sure to follow the instructions described below.
- The following images are for reference only. For more details contact your local dealer.

To prevent exposure to wind and snow, install a baffle plates on the air side of the outdoor unit (see **5.2. Service space** for space requirement):

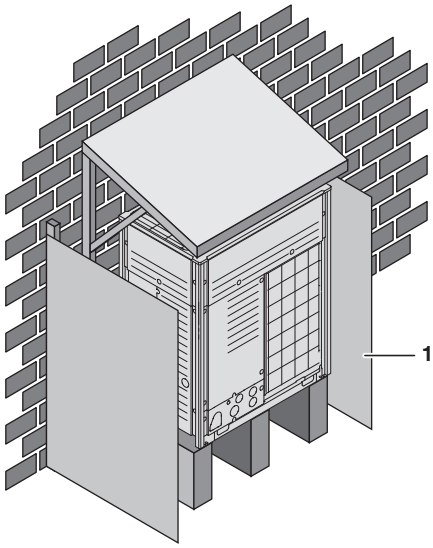

1 Baffle plates

In heavy snowfall areas it is very important to select an installation site where the snow will not affect the unit. Additionally, installation of a snow guard is recommended. When installing the unit in a location where there is heavy snowfall, remove the coil guards to prevent snow from accumulating on the fins.
If lateral snowfall is possible, make sure that the heat exchanger coil is not affected by the snow (if necessary construct a lateral canopy). Install the outdoor unit so that the bottom frame is at least 19-11/16 in. (500 mm) above predicted snowfall levels.

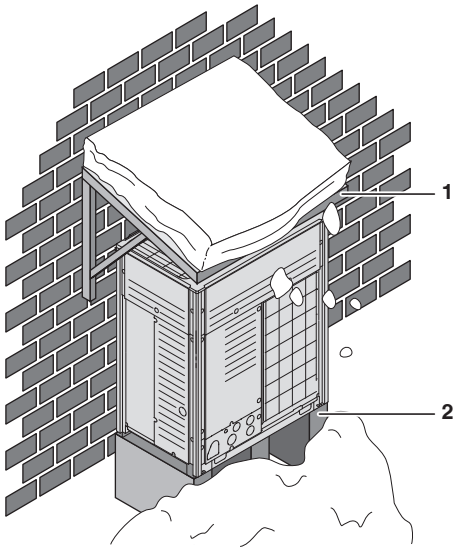

1 Construct a large canopy.
2 Construct a pedestal.

⚠ NOTE

When operating the unit in a low outdoor ambient temperature with high humidity conditions, make sure to take precautions to keep the drain holes of the unit free.

5. Dimensions and service space

5.1. Dimensions of outdoor unit

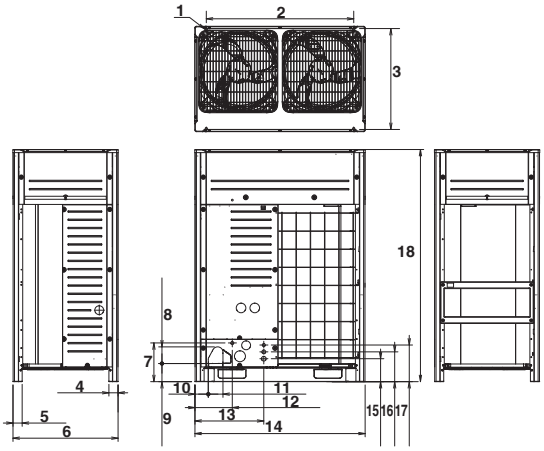

Unit: in. (mm)

	REYQ72-168X type
1	Foundation bolt holes 9/16 (15)×7/8 (22.5) oblong holes×4
2	Pitch of foundation bolt holes 42-3/8 (1076)
3	Pitch of foundation bolt holes 28-7/16 to 29 (722 to 737)
4	2-5/8 (67)
5	2-5/8 (67)
6	30-3/16 (767)
7	11-1/8 (282)
8	4-13/16 (122)
9	5-3/16 (132)
10	3-7/8 (98)
11	4-3/16 (107)
12	10-11/16 (272)
13	19-3/4 (502)
14	48-7/8 (1242)
15	6-9/16 (167)
16	8-9/16 (217)
17	10-1/2 (267)
18	66-11/16 (1694)

5.2. Service space

The space around the unit is adequate for servicing and the minimum space for air inlet and air outlet is available (refer to the figure below and choose one of the possibilities).

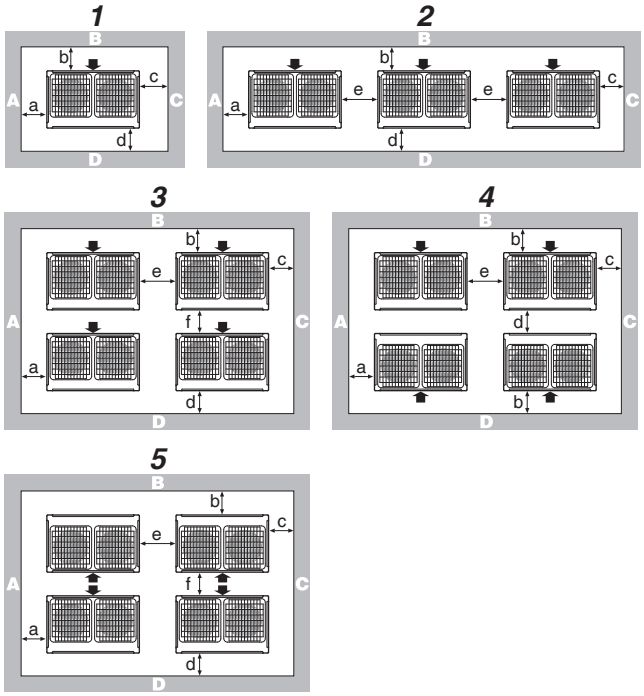

ABCD Sides along the installation site with obstacles

➧ Suction side

	A+B+C+D		A+B
1	a≥3/8 (10) b≥11-3/4 (300) c≥3/8 (10) d≥19-5/8 (500)	a≥2 (50) b≥3-7/8 (100) c≥2 (50) d≥19-5/8 (500)	a≥7-7/8 (200) b≥11-3/4 (300)
2	a≥3/8 (10) b≥11-3/4 (300) c≥3/8 (10) d≥19-5/8 (500) e≥3/4 (20)	a≥2 (50) b≥3-7/8 (100) c≥2 (50) d≥19-5/8 (500) e≥3-7/8 (100)	a≥7-7/8 (200) b≥11-3/4 (300) e≥15-3/4 (400)
3	a≥3/8 (10) b≥11-3/4 (300) c≥3/8 (10) d≥19-5/8 (500) e≥3/4 (20) f≥23-5/8 (100)	a≥2 (50) b≥3-7/8 (100) c≥2 (50) d≥19-5/8 (500) e≥3-7/8 (100) f≥19-5/8 (500)	Unit: in.(mm)
4	a≥3/8 (10) b≥11-3/4 (300) c≥3/8 (10) d≥19-5/8 (500) e≥3/4 (20)	a≥2 (50) b≥3-7/8 (100) c≥2 (50) d≥19-5/8 (500) e≥3-7/8 (100)	
5	a≥3/8 (10) b≥19-5/8 (500) c≥3/8 (10) d≥19-5/8 (500) e≥3/4 (20) f≥35-7/16 (900)	a≥2 (50) b≥19-5/8 (500) c≥2 (50) d≥19-5/8 (500) e≥3-7/8 (100) f≥23-5/8 (600)	

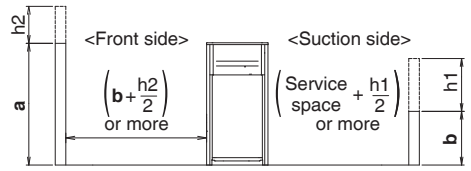

a 59 in. (1500 mm)

b 19-5/8 in. (500 mm)

- In case of an installation site where sides A+B+C+D have obstacles, the wall heights of sides A+C have no impact on service space dimensions. Refer to the foregoing figure for impact of wall heights of sides B+D on service space dimensions.
- In case of an installation site where only the sides A+B have obstacles, the wall heights have no influence on any indicated service space dimensions.

INFORMATION

- Please secure enough space in front of the outdoor unit for on-site installation of the refrigerant piping.
- The service space dimensions in above figure are based on cooling operation at 95°F (35°C) ambient temperature (standard conditions).
- If the design outdoor temperature exceeds 95°F (35°C) or the heat load exceeds maximum capacity in all the outdoor unit, take an even large space on the intake shown in figure in 5.2. Service space.
- If installing snow guard (field supply), please incorporate the dimensions of the snow guard into the unit's outer dimensions in order to calculate the necessary amount of space.
- In places with low winter temperatures that may freeze the waste water created by defrosting during heating operation, please leave enough space between the bottom frame of the outdoor unit and its base. (19-11/16 in. (500 mm) to 40 in. (1000 mm) of space is recommended.)

INFORMATION

Further specifications can be found in the Engineering Data Book.

6. Inspecting, handling and unpacking the unit

6.1. Inspection

At delivery, the unit must be checked and any damage must be reported immediately to the carrier's claims agent.

6.2. Handling

1 When handling the unit, take into account the following:

Fragile, handle the unit with care.

Keep the unit upright in order to avoid compressor damage.

2 Choose beforehand the path along which the unit is to be brought in.

3 Bring the unit as close as possible to its final installation position in its original package to prevent damage during transport.

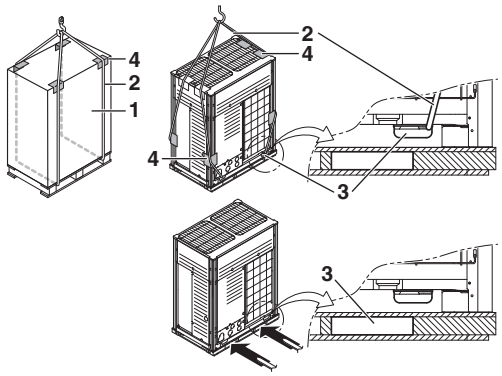

1 Packaging material
2 Belt sling
3 Opening
4 Protector

4 Lift the unit preferably with a crane and 2 belts of at least 27 ft. (8 m) long as shown in the figure above.
Always use protectors to prevent belt damage and pay attention to the position of the unit's center of gravity.

NOTE

Use a belt sling of ≤3/4 in. (20 mm) wide that adequately bears the weight of the unit.

A forklift can only be used for transport as long as the unit remains on its pallet as shown above.

6.3. Unpacking

CAUTION

To avoid injury, do not touch the air inlet or aluminum fins of the unit.

WARNING

Tear apart and throw away plastic packaging bags so that children will not play with them. Children playing with plastic bags face danger of death by suffocation.

1 Remove the unit from its packing material.
Take care not to damage the unit when unpacking.

2 Remove the 4 bolts fixing the unit to its pallet.

3 Make sure that all accessories as mentioned in 2.1. Accessories supplied with this unit on page 3 are available in the unit.

6.4. Installing the unit

Make sure the unit is installed level on a sufficiently strong base to prevent vibration and noise.

NOTE

When the installation height of the unit needs to be increased, do not use stands to only support the corners.

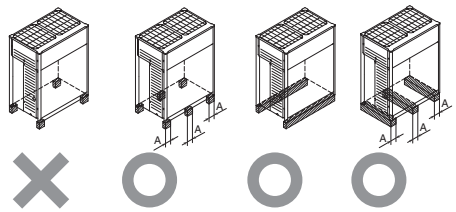

A ≥3-7/8 in. (100 mm)
X Not allowed
O Allowed

- The height of the foundation must be at least 5-7/8 in. (150 mm) from the floor.
  In heavy snowfall areas, this height should be increased, depending on the installation place and condition.
- The unit must be installed on a solid longitudinal foundation (steel beam frame or concrete) and make sure the base under the unit is larger than the gray marked area.

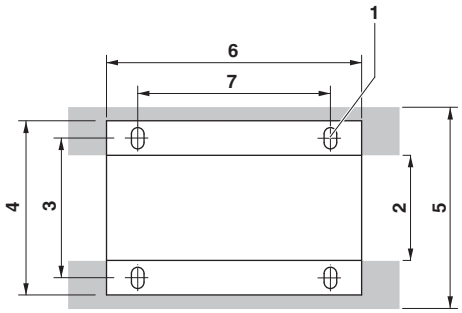

Dimensions for above figure		
1	Hole for foundation bolt	ϕ9/16 in. (15 mm) dia: 4 positions
2	2 Inner dimension of the base	24-7/8 in. (631 mm)
3	Distance between foundation bolt holes	29 in. (729 mm)
4	Width of unit	30-3/16 in. (767 mm)
5	Outer dimension of the base	≥30-3/16 in. (767 mm)
6	Longitudinal foundation dimension	48-7/8 in. (1242 mm)
7	Distance between foundation bolt holes	42-3/8 in. (1076 mm)

- Fasten the unit in place using 4 foundation bolts 7/16 in. (M12). It is best to screw in the foundation bolts until their length remains 13/16 in. (20 mm) above the foundation surface.

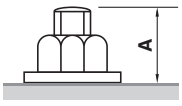

A=13/16 in. (20 mm)

NOTE

- There are restrictions on the refrigerant pipe connecting order between outdoor units in the case of the multi system.
  See 1.2.2. Outdoor units combinations on page 2 for detail.
- When installing on a roof, make sure the roof floor is strong enough and be sure to waterproof all work.
- Make sure the area around the machine drains properly by setting up drainage grooves around the foundation.
- Drain water is sometimes discharged from the outdoor unit when it is running.
- For anti-corrosion type, use nuts with resin washers. If the paint on nut connections comes off, the anti-corrosion effect may decrease.

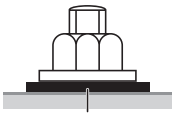

Resin washer

6.5. Method for removing shipping plates

The shipping plates installed over the compressor legs for protecting the unit during transport must be removed. Proceed as shown in the figure and procedure below. REYQ72-120X does not have the shipping plates.

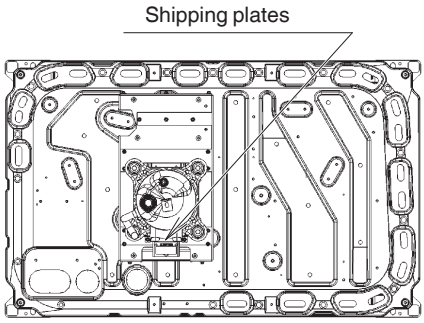

Front
REYQ144,168X type

1 Remove bolts (2 pcs) for fixing shipping plate.

2 Remove all shipping plates (3 pcs).

3 Be sure to tighten the removed bolts back again.

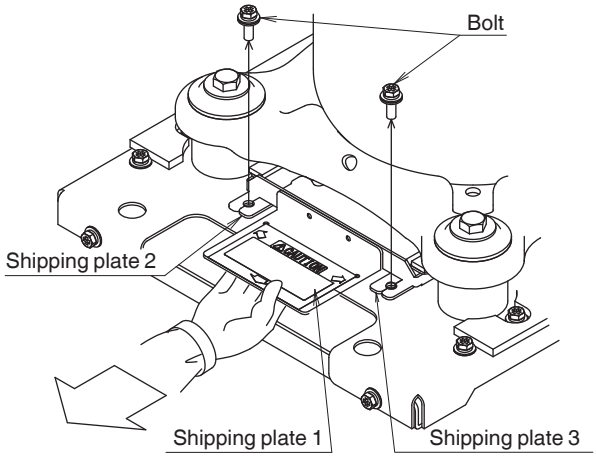

NOTE

If the unit is operated with the shipping plates still attached, abnormal vibration or noise may be generated.

6.6. Method for opening the sliding plate

The sliding plate should be moved to the open position in the following regions to minimize temperature rise in the main control box: CA, NV, AZ, NM, OK, TX, AR, LA, MS, AL, TN, GA, NC, SC, FL and Latin America.

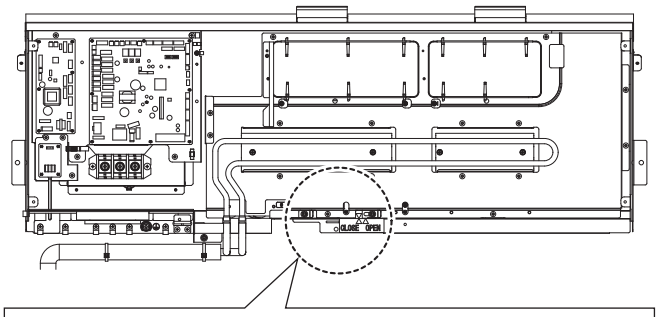

1 Remove the left screw (1 pc.) and loosen the right screw (1 pc.).

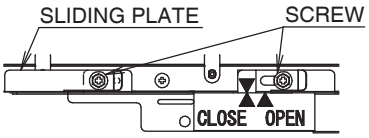

2 Move the sliding plate to the right and set the arrow to “OPEN”.

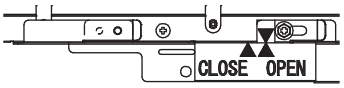

3 Reinstall the left screw and tighten both the left and right screws.

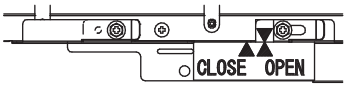

NOTE

Failure to follow the above instructions could lead to premature component failure.

7. Refrigerant pipe size and allowable pipe length

7.1. General information

NOTE

The refrigerant R410A requires strict cautions for keeping the system clean, dry and tight.

- Clean and dry: foreign materials (including mineral oils or moisture) should be prevented from getting mixed into the system.
- Tight: R410A does not contain any chlorine, does not destroy the ozone layer, and does not reduce earth’s protection against harmful ultraviolet radiation. R410A can contribute slightly to the greenhouse effect if it is released. Therefore we should take special attention to check the tightness of the installation.

7.2. Selection of piping material

NOTE

Piping and other pressure containing parts shall comply with the applicable legislation and shall be suitable for refrigerant. Use phosphoric acid deoxidized seamless copper for refrigerant.

NOTE

- All field piping must be installed by a licensed refrigeration technician and must comply with relevant local and national regulations.
- After piping work is complete, do not under any circumstances open the stop valve until 9. Field wiring on page 18 and 12. Checking of device and installation conditions on page 24 are complete.
- Do not use flux when brazing the refrigerant piping. Use the phosphor copper brazing filler metal (B-Cu93P-710/795 : ISO 3677) which does not require flux. Flux has extremely negative effect on refrigerant piping systems. For instance, if the chlorine based flux is used, it will cause pipe corrosion or, in particular, if the flux contains fluorine, it will damage the refrigerant oil.

- Use only pipes which are clean inside and outside and which do not accumulate harmful sulfur, oxidants, dirt, cutting oils, moisture, or other contamination. (Foreign materials inside pipes including oils for fabrication must be 0.14 gr/10 ft. (30 mg/10 m) or less.)
- Use the following items for the refrigerant piping.
  Material : Jointless phosphor-deoxidized copper pipe.
  Size : See 7.3. Selection of piping size to determine the correct size.
  Thickness : Select a thickness for the refrigerant piping which complies with national and local laws.
- For piping work, follow the maximum tolerated length, difference in height, and length after a branch indicated in the 7.5. System piping (length) limitations on page 11.
- Outdoor unit multi connection piping kit and refrigerant branch kit (sold separately) are needed for connection of piping between outdoor units (in case of multi system) and piping branches.
- Use only separately sold items selected specifically according to the outdoor unit multi connection piping kit, the refrigerant branch kit selection in the 7.4. Selection of refrigerant branch kits on page 10.

7.3. Selection of piping size

Determine the proper size referring to following tables and reference figure (only for indication).

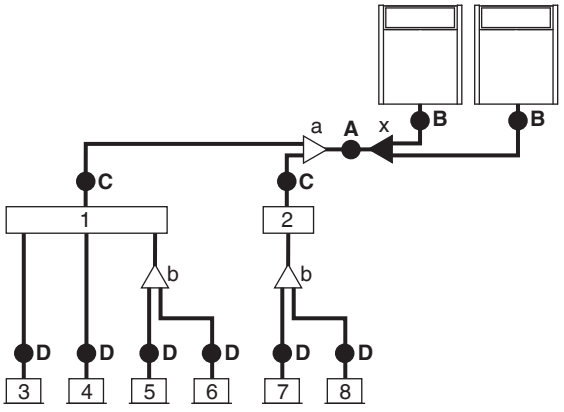

1 Multi Branch Selector unit
2 Single Branch Selector unit
3-8 VRV indoor units
a, b Refrigerant branch kits
x Outdoor unit multi connection piping kits

7.3.1. Piping between outdoor units and (first) refrigerant branch kit: A, B

Choose from the following table in accordance with the outdoor unit total capacity type, connected downstream.

Outdoor unit capacity type	Piping outer diameter size		
	Suction gas pipe	High/low pressure gas pipe	Liquid pipe
REYQ72X type	3/4 in. (19.1 mm)	5/8 in. (15.9 mm)	3/8 in. (9.5 mm)
REYQ96X type	7/8 in. (22.2 mm)	3/4 in. (19.1 mm)	
REYQ120X type	1-1/8 in. (28.6 mm)		1/2 in. (12.7 mm)
REYQ144X type		7/8 in. (22.2 mm)	
REYQ168X type			5/8 in. (15.9 mm)
REYQ192, 216X type		1-1/8 in. (28.6 mm)	
REYQ240X type	1-3/8 in. (34.9 mm)		
REYQ264-336X type			3/4 in. (19.1 mm)
REYQ360-456X type	1-5/8 in. (41.3 mm)	1-3/8 in. (34.9 mm)	

7.3.2. Piping between refrigerant branch kits or refrigerant branch kits and Branch Selector units: C

Choose from the following table in accordance with the indoor unit total capacity, connected downstream. Do not let the connection piping exceed the refrigerant piping size chosen by the general system model name.

Indoor unit capacity index	Piping outer diameter size		
	Suction gas pipe	High/low pressure gas pipe	Liquid pipe
<54	5/8 in. (15.9 mm)	1/2 in. (12.7 mm)	3/8 in. (9.5 mm)
54≤×<72	3/4 in. (19.1 mm)	5/8 in. (15.9 mm)	
72≤×<111	7/8 in. (22.2 mm)	3/4 in. (19.1 mm)	
111≤×<162	1-1/8 in. (28.6 mm)		1/2 in. (12.7 mm)
162≤×<230		1-1/8 in. (28.6 mm)	5/8 in. (15.9 mm)
230≤×<300	1-3/8 in. (34.9 mm)		3/4 in. (19.1 mm)
>300	1-5/8 in. (41.3 mm)		

Example:

Downstream capacity for C = capacity index of (unit 3 + unit 4 + unit 5 + unit 6)

7.3.3. Piping between refrigerant branch kits or Branch Selector units and indoor units: D

Pipe size for direct connection to indoor units must be the same as the connection size of the VRV indoor units.

Indoor unit capacity index	Piping outer diameter size	
	Gas pipe	Liquid pipe
07, 09, 12, 18	1/2 in. (12.7 mm)	1/4 in. (6.4 mm)
24, 30, 36, 42, 48, 54	5/8 in. (15.9 mm)	3/8 in. (9.5 mm)
72	3/4 in. (19.1 mm)	
96	7/8 in. (22.2 mm)	

7.4. Selection of refrigerant branch kits

For piping example, refer to 7.3. Selection of piping size on page 9.

- When using REFNET joints at the first branch from the outdoor units, choose from the following table in accordance with the capacity of the outdoor unit (example: REFNET joint a - see 7.3. Selection of piping size).

Outdoor unit capacity type	Kit name
REYQ72, 96X type	KHRP25A33T9 KHRP25A33TA
REYQ120-216X type	KHRP25M72TU9 KHRP25M72TUA
REYQ240-456X type	KHRP25M73TU9 KHRP25M73TUA

- For REFNET joints other than the first branch (example REFNET joint b - see 7.3. Selection of piping size), select the proper branch kit model based on the total capacity of all indoor units connected after the refrigerant branch.

Indoor unit capacity index	Kit name	
	(for 3 pipes)	(for 2 pipes)
<72	KHRP25A22T9 KHRP25A22TA	KHRP26A22T9 KHRP26A22TA
72≤×<111	KHRP25A33T9 KHRP25A33TA	KHRP26A33T9 KHRP26A33TA
111≤×<246	KHRP25M72TU9 KHRP25M72TUA	KHRP26M72T9 KHRP26M72TUA
≥246	KHRP25M73TU9 KHRP25M73TUA	KHRP26M73T9 KHRP26M73TUA

- Concerning REFNET headers, choose from the following table in accordance with the total capacity of all the indoor units connected after the REFNET header.

Indoor unit capacity index	Kit name	
	(for 3 pipes)	(for 2 pipes)
<72	KHRP25M33H9 KHRP25M33HA	KHRP26M22H9/ KHRP26M22HA: maximum 4 inddor units or KHRP26M33H9/ KHRP26M33HA: maximum 8 indoor units
72≤×<111		KHRP26M33H9 KHRP26M33HA
111≤×<230	KHRP25M72H9 KHRP25M72HA	KHRP26M72H9 KHRP26M72HA
≥230	KHRP25M73HU9 KHRP25M73HUA	KHRP26M73H9 KHRP26M73HA

INFORMATION

Maximum 8 branches can be connected to a header.

- How to choose an outdoor multi connection piping kit (needed if the outdoor unit capacity type is 144 or more). Choose from the following table in accordance with the number of outdoor units.

Number of outdoor units	Branch kit name
2	BHFP26P100U BHFP26P100UA
3	BHFP26P151U BHFP26P151UA

7.5. System piping (length) limitations

<Example of refrigerant piping (8 indoor units are connected)>

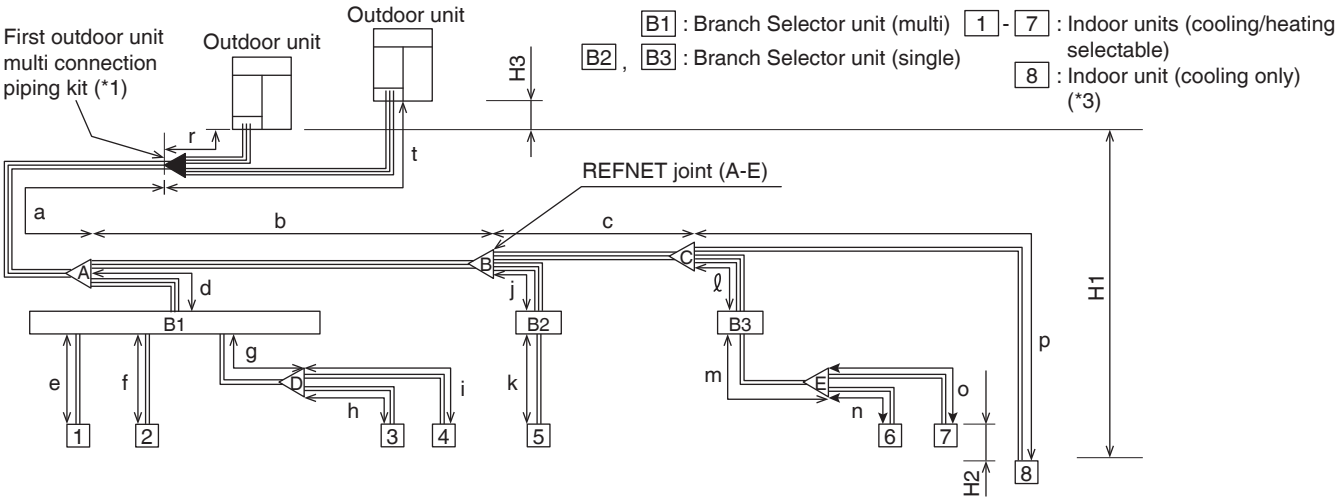

(*1) "⇶" represents an outdoor unit multi connection piping kit.
The outdoor unit multi connection piping kit must always be installed horizontally, paying attention to the installation restrictions indicated in **8. Precautions on refrigerant piping** on page 14.

<Example of connection>

(1) Piping from outdoor units to Branch Selector units

(3 lines): **3 pipes**
- Suction gas pipe
- High/low pressure gas pipe
- Liquid pipe

(2) Piping from Branch Selector units to the indoor units, and from refrigerant branch kits to the cooling-only indoor units (*2)

(2 lines): **2 pipes**
- (Suction) gas pipe
- Liquid pipe

(*2) The 2-line gas pipe that is branched from the 3-line pipe and goes to the cooling-only indoor units should be connected to the suction gas pipe.
(*3) Cooling-only units should make up ≤50% of the total capacity of indoor units.

<table>
<tr><td rowspan="4">Maximum allowable length</td><td rowspan="3">From outdoor unit (*4) to indoor unit</td><td>Actual piping length</td><td>Actual piping length from the outdoor unit (*4) to the indoor unit: ≤540 ft. (165 m)
(Example) 4 : a+d+g+i≤540 ft. (165 m), 7 : a+b+c+ℓ+m+o≤540 ft. (165 m),
8 : a+b+c+p≤540 ft. (165 m)</td></tr>
<tr><td>Equivalent length</td><td>Equivalent piping length from the outdoor unit (*4) to the indoor unit: ≤623 ft. (190 m) (*6)
(Calculate the equivalent piping length for the REFNET joint as 1.6 ft. (0.5 m), REFNET header as 3.3 ft. (1 m), BS4•6Q54TVJ as 19 ft. (6 m), BS8 to 12Q54TVJ as 33 ft. (10 m), BSQ36•60TVJ as 13 ft. (4 m), and BSQ96TVJ as 19 ft. (6 m).)</td></tr>
<tr><td>Total extension</td><td>Total actual piping length from the outdoor unit (*4) to all indoor units: ≤ 3280 ft. (1000 m)</td></tr>
<tr><td>From first outdoor unit multi connection piping kit to outdoor unit (in a multi system)</td><td>Actual piping length
Equivalent length</td><td>Actual piping length from the first outdoor unit multi connection piping kit to the outdoor unit: ≤33 ft. (10 m)
Equivalent piping length from the first outdoor unit multi connection piping kit to the outdoor unit: ≤43 ft. (13 m)
 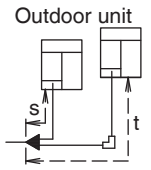

s≤33 ft. (10 m) (equivalent length≤43 ft. (13 m))
t≤33 ft. (10 m) (equivalent length≤43 ft. (13 m))</td></tr>
<tr><td rowspan="3">Allowable height difference</td><td>From outdoor unit to indoor unit</td><td>Height difference</td><td>Height difference between outdoor unit and indoor unit (H1): ≤164 ft. (50 m) (if outdoor unit is lower than indoor unit, ≤130 ft. (40 m)) (*7)</td></tr>
<tr><td>From indoor unit to indoor unit</td><td>Height difference</td><td><table><tr><td>Actual piping length X</td><td>Height difference between indoor units (H2)</td></tr><tr><td>X≤540 ft. (165 m)</td><td>≤49 ft. (15 m)</td></tr><tr><td>X≤390 ft. (120 m)</td><td>≤98 ft. (30 m)</td></tr></table></td></tr>
<tr><td>From outdoor unit to outdoor unit</td><td>Height difference</td><td>Height difference between outdoor units (H3): ≤16 ft. (5 m)</td></tr>
<tr><td colspan="2">Allowable length after branch (*5)</td><td>Actual piping length</td><td>Actual piping length from the first REFNET joint or REFNET header to indoor unit: ≤130 ft. (40 m) (*8)
(Example) 4 : d+g+i≤130 ft. (40 m), 7 : b+c+ℓ+m+o≤130 ft. (40 m),
8 : b+c+p≤130 ft. (40 m)</td></tr>
</table>

(*4) In the case of an outdoor units multi system, “outdoor unit” should be read as the “first outdoor unit multi connection piping kit”, seen from the indoor units side.

(*5) In the case of a multi Branch Selector unit, it should be read as the “REFNET header”, and the allowable length of piping should be selected. In the case where only 1 multi Branch Selector unit is included in the system, the actual piping length from each branch points of the multi Branch Selector unit to each indoor units should be ≤130 ft. (40 m).

(*6) In the case where the equivalent piping length from outdoor units to indoor units ≥295 ft. (90 m), make sure to upsize the liquid pipe of the main pipe (see the figure below), referring to the table below. (Do not upsize the high/low pressure gas pipe and the suction gas pipe.)

Outdoor unit capacity type	Liquid pipe
REYQ72, 96X type	ϕ3/8 in. (9.5 mm) → ϕ1/2 in. (12.7 mm)
REYQ120, 144X type	ϕ1/2 in. (12.7 mm) → ϕ5/8 in. (15.9 mm)
REYQ168-240X type	ϕ5/8 in. (15.9 mm) → ϕ3/4 in. (19.1 mm)
REYQ264-456X type	ϕ3/4 in. (19.1 mm) → ϕ7/8 in. (22.2 mm)

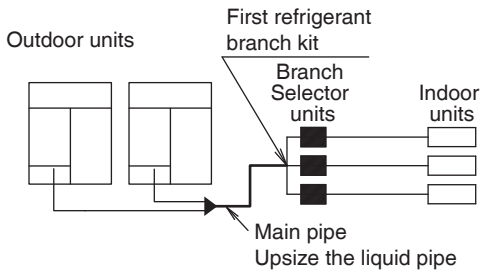

(*7) It can be extended to ≤295 ft. (90 m) (if outdoor unit is lower than indoor unit, ≤195 ft. (60 m) by field setting). See [2-49]=Height difference setting on page 34.

(*8) When conditions listed in the table below are all satisfied, the allowable length restrictions after branch is ≤295 ft. (90 m).

Necessary conditions	Example: Only the allowable length after branch for the indoor unit 9 exceeds 130 ft. (40 m) in the figure in the lower right	
1. Upsize the liquid pipe from the first refrigerant branch kit to the final refrigerant branch kit for the indoor unit beyond 130 ft. (40 m). • If upsizing is impossible, the conditions are not satisfied. • If the upsized line would become larger than the main pipe, then the main pipe should also be upsized.	Upsize the liquid pipes b, c, d, e, f and g in the figure in the right. The upsizing specifications should be as follows: ϕ3/8 in. (9.5 mm) → ϕ1/2 in. (12.7 mm) ϕ1/2 in. (12.7 mm) → ϕ5/8 in. (15.9 mm) ϕ5/8 in. (15.9 mm) → ϕ3/4 in. (19.1 mm) ϕ3/4 in. (19.1 mm) → ϕ7/8 in. (22.2 mm)	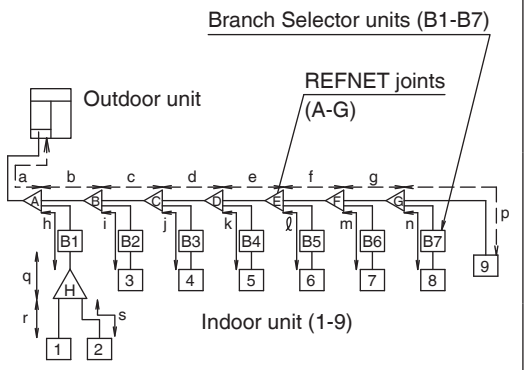 **b+c+d+e+f+g+p>130 ft. (40 m)** From outdoor unit to the farthest indoor unit 9 From outdoor unit to the nearest indoor unit 1
2. The total piping length, calculated by doubling the piping length as upsized in 1 above, is ≤ 3280 ft. (1000 m). (The main pipe, and lines that are not upsized, should not be doubled.)	a + **b×2+c×2+d×2+e×2+f×2+g×2** +h+i+j+k+l+m+n+p+q+r+s ≤ 3280 ft. (1000 m)	
3. The actual piping length from each indoor units to the nearest refrigerant branch kit are all ≤130 ft. (40 m).	• i, j ···, p≤130 ft. (40 m) • h+q+r≤130 ft. (40 m) • h+q+s≤130 ft. (40 m)	
4. The difference between the actual piping length from the outdoor unit to the farthest indoor unit, and the actual piping length from the outdoor unit to the nearest indoor unit, is ≤130 ft. (40 m).	Actual piping length of 9 Actual piping length of 1 (a+b+c+d+e+f+g+p) – (a+h+q+r) ≤130 ft. (40 m)	

In the case of a multi Branch Selector unit, if a junction pipe kit (separately sold) is used for combining 2 lines, the actual piping length between the multi Branch Selector unit and the indoor units should be ≤65 ft. (20 m).

8. Precautions on refrigerant piping

- Do not allow anything other than the designated refrigerant to get mixed into the refrigerant cycle, such as air, nitrogen, etc. If any refrigerant gas leaks while working on the unit, ventilate the room thoroughly right away.
- Use R410A only when adding refrigerant.
- Installation tools:
  Make sure to use installation tools (gauge manifold, charge hose, etc.) that are exclusively used for R410A installations to withstand the pressure and to prevent foreign materials (e.g., mineral oils and moisture) from mixing into the system.
- Vacuum pump:
  - Use a 2-stage vacuum pump with a non-return valve.
  - Make sure the pump oil does not flow oppositely into the system while the pump is not working.
  - Use a vacuum pump which can evacuate to 500 microns.

Protection against contamination when installing pipes
Take measures to prevent foreign materials like moisture and contamination from mixing into the system.

	Installation	Protection method
	More than a month	Pinch the pipe
	Less than a month	Pinch or tape pipe
	Regardless of the period	

Block all gaps in the holes for passing out piping and wiring using sealing material (field supply) (the capacity of the unit will drop and small animals may enter the machine).
Example: passing piping out through the front.

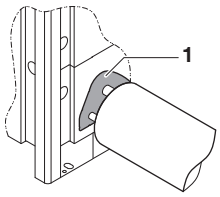

1 Close the areas marked with ▒. (When the piping is routed from the front panel.)

- Use clean pipes only.
- Hold the pipe end downwards when removing burrs.
- Cover the pipe end when inserting it through a wall so that no dust or dirt enters the pipe.

⚠ NOTE

- After all the piping has been connected, make sure there is no gas leak. Use Dry Nitrogen to perform a gas leak detection.
- After knocking out the holes, we recommend you remove burrs in the knock holes and paint the edges and areas around the edges using the repair paint.

8.1. Caution for brazing

- Make sure to blow through with Dry Nitrogen when brazing. Blowing through with Dry Nitrogen prevents the creation of large quantities of oxidized film on the inside of the piping. An oxidized film adversely affects valves and compressors in the refrigerating system and prevents proper operation.
- The Dry Nitrogen pressure should be set to 2.9 psi (0.02 MPa (i.e., just enough so it can be felt on the skin)) with a pressure-reducing valve.

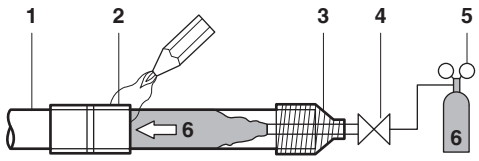

1 Refrigerant piping
2 Part to be brazed
3 Taping
4 Hands valve
5 Pressure-reducing valve
6 Dry Nitrogen

Do not use anti-oxidants when brazing the pipe joints. Residue can clog pipes and break equipment:

- Do not use flux when brazing copper-to-copper refrigerant piping. Use phosphor copper brazing filler alloy (BCuP) which does not require flux.
- Flux has an extremely harmful influence on refrigerant piping systems. For instance, if chlorine based flux is used, it will cause pipe corrosion or, in particular, if the flux contains fluorine, it will deteriorate the refrigerant oil.

8.2. Connecting the refrigerant piping

8.2.1. Decide front or side (bottom) connection

Installation of refrigerant piping is possible as front connection or side connection (when taken out from the bottom) as shown in the figure below.

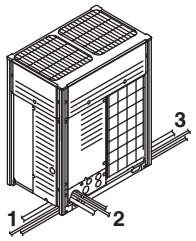

1 Left-side connection
2 Front connection
3 Right-side connection

- For side connections, the knockout hole on the bottom plate should be removed:

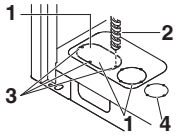

1 Knockout hole (Piping)
2 Drill
3 Points for drilling
4 Knockout hole (Power supply wiring)

⚠ NOTE

Precautions when knocking out knockout holes:

- Be sure to avoid damaging the casing.
- After knocking out the knockout holes, we recommend you remove the burrs and paint the edges and areas around the edges using repair paint to prevent rusting.
- When passing electrical wiring through the knock holes, protect the wiring with a conduit or bushings, making sure not to damage the wiring.

8.2.2. Remove the pinched pipes

⚠ WARNING

Any gas or oil remaining inside the stop valve may blow off the pinched piping.
Failure to observe the instructions in procedure below properly may result in property damage or personal injury, which may be serious depending on the circumstances.

Use the following procedure to remove the pinched piping:

1 Remove the valve cover and make sure that the stop valves are fully closed.

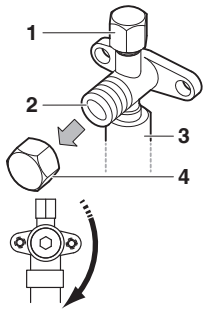

1 Service port and service port cover
2 Stop valve
3 Field piping connection
4 Stop valve cover

2 Connect the vacuuming/recovery unit to service ports of all stop valves.

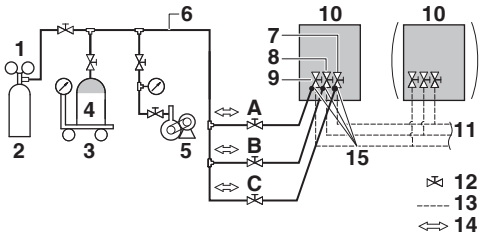

1 Gauge manifold
2 Nitrogen
3 Measuring instrument
4 Refrigerant R410A tank (siphon system)
5 Vacuum pump
6 Charge hose
7 High/low pressure gas pipe stop valve
8 Suction gas pipe stop valve
9 Liquid pipe stop valve
10 Outdoor unit
11 To Branch Selector unit (indoor unit)
12 Stop valve
13 Field piping
14 Gas flow
15 Stop valve service port
A Valve A
B Valve B
C Valve C

3 Recover gas and oil from the pinched piping by using a recovery unit.

⚠ CAUTION

Do not vent gases into the atmosphere.

4 When all gas and oil is recovered from the pinched piping, disconnect the charge hose and close the service ports.

⚠ WARNING

When brazing at the proximity of the stop valves, be sure to protect the stop valves mounting plate with a protective plate to prevent from contacting with the burner flame.

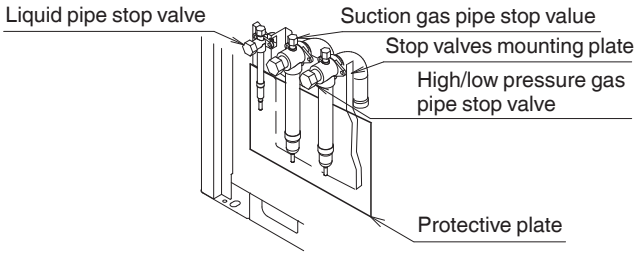

5 Cut off the lower part of the smaller pinched piping with an appropriate tool such as pipe cutters. Let the remaining oil drip out in case the recovery was not complete.

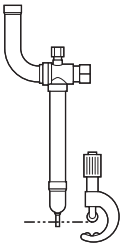

Wait until all oil is dripped out.

6 Cut the pinched piping off with a pipe cutter just above the brazing point or marking if there is no brazing point.

⚠ WARNING

Never remove the pinched piping by brazing.
Any gas or oil remaining inside the stop valve may blow off the pinched piping.
Failure to observe the instructions in procedure below properly may result in property damage or personal injury, which may be serious depending on the circumstances.

7 Wait until all oil is dripped out before continuing with the connection of the field piping in case the recovery was not complete.

8.2.3. Connecting refrigerant piping to the outdoor unit

- All pipings for gas and liquid over from the field connection piping kit are field supplied.

Front connection

Remove the knockout hole of the piping intake and connect piping to the piping intake.

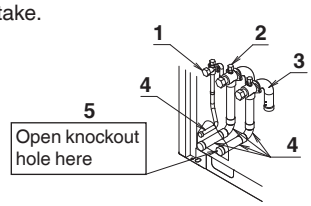

1 Liquid pipe stop valve
2 Suction gas pipe stop valve
3 High/low pressure gas pipe stop valve
4 Filed connection piping kit (accessory)
5 Knockout hole

Side (bottom) connection

Remove the knockout hole on the bottom frame and lead out the piping from the bottom frame.

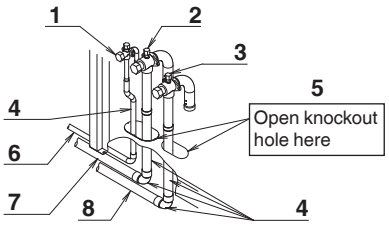

1 Liquid pipe stop valve
2 Suction gas pipe stop valve
3 High/low pressure gas pipe stop valve
4 Filed connection piping kit (accessory)
5 Knockout hole
6 Liquid side piping (field supply)
7 Suction gas side piping (field supply)
8 High/low pressure gas side piping (field supply)

INFORMATION

All local inter unit piping are field supplied except the accessory pipes.

NOTE

Precautions when connecting field piping. Add brazing material as shown in the figure.

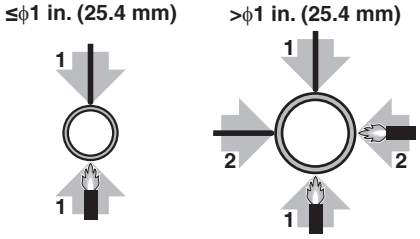

NOTE

- Be sure to use the supplied accessory pipes when carrying out piping work in the field.
- Be sure that the field installed piping does not touch other pipes, the bottom panel or side panel. Especially for the bottom and side connection, be sure to protect the piping with suitable insulation, to prevent it from coming into contact with the casing generated.

Connection from the stop valves to the field piping can be done by using accessory pipes supplied as accessory.

NOTE

Make sure that the onsite piping does not come in contact with other piping, the bottom frame or side panels of the unit.

The connections to the branch kits are the responsibility of the installer (field piping).

8.2.4. Precautions when connecting piping between outdoor units (multiple outdoor units system)

- To connect the piping between outdoor units, an optional multi connection piping kit BHFP26P100U is always required. When installing the piping, follow the instructions in the installation manual that comes with the kit.
- Only proceed with piping work after considering the limitations on installing listed here and in the chapter 8.2. Connecting the refrigerant piping on page 14 always referring to the installation manual delivered with the kit.

8.2.5. Possible installation patterns and configurations

- The piping between the outdoor units must be routed level or slightly upward to avoid the risk of oil retention into the piping.

Pattern 1 **Pattern 2**

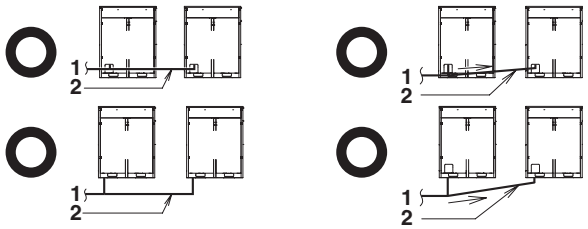

1 To indoor units
2 Piping between outdoor units

Prohibited patterns: change to pattern 1 or 2

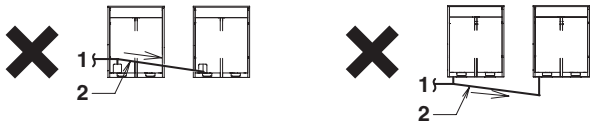

1 To indoor units
2 Piping between outdoor units

- To avoid the risk of oil retention to the outmost outdoor unit, always connect the stop valve and the piping between outdoor units as shown in the 4 correct possibilities of the figure below.

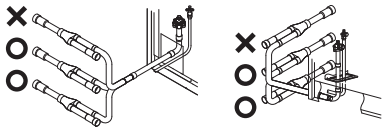

Prohibited patterns: change to pattern 1 or 2

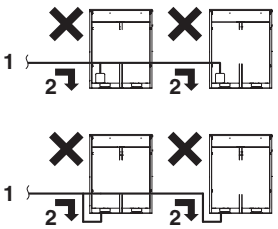

1 To indoor units
2 Oil collects to the outmost outdoor units

Change to configuration as in figure below

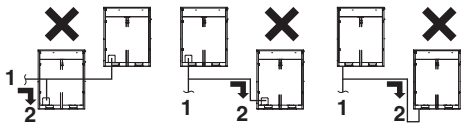

1 To indoor units
2 Oil collects to the outmost outdoor units

Correct configuration

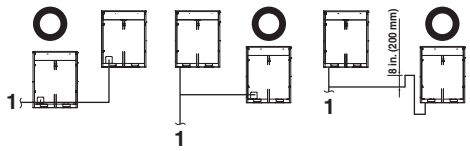

1 To indoor units

- If the piping length between the outdoor units exceeds 6.5 ft. (2 m), create a rise of 8 in. (200 mm) or more in the suction gas and high/low pressure gas line within a length of 6.5 ft. (2 m) from the kit.

If ≤6.5 ft. (2 m)

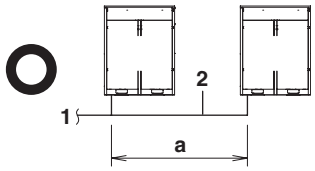

If >6.5 ft. (2 m)

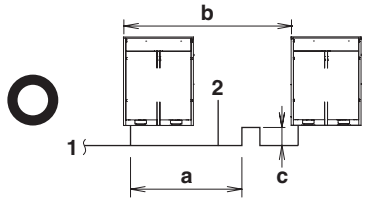

1 To indoor units
2 Piping between outdoor units
a ≤6.5 ft. (2 m)
b ≥8 in. (200 mm)
c >6.5 ft. (2 m)

NOTE

There are restrictions on the refrigerant pipe connection order between outdoor units during installation in case of a multiple outdoor unit system. Install according to following restrictions. The capacities of outdoor units A and B must fulfill the following restriction conditions: A≥B.

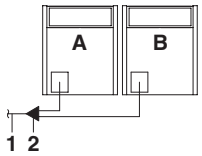

1 To indoor units
2 Outdoor unit multi connection piping kit (first branch)

8.2.6. Branching the refrigerant piping

1 For installation of the refrigerant branch kit, refer to the installation manual delivered with the kit.

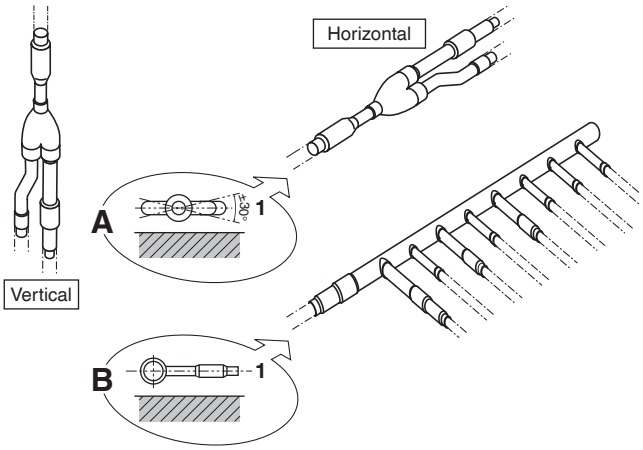

1 Horizontal surface

- Mount the REFNET joint so that it branches either horizontally or vertically.
- Mount the REFNET header so that it branches horizontally.

2 Installation of the multi connection piping kit.

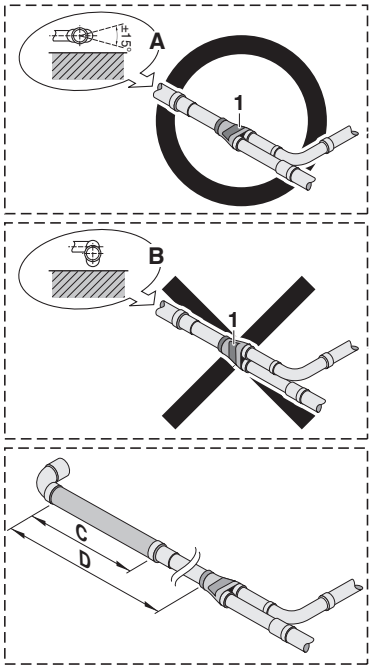

C >4-3/4 in. (120 mm)
D >19-11/16 in. (500 mm)

- Install the joints horizontally, so that the caution label (1) attached to the joint comes to the top.
  - Do not tilt the joint more than 15° (see view A).
  - Do not install the joint vertically (see view B).
- Make sure that the total length of the piping connected to the joint is absolute straight for more than 19-11/16 in. (500 mm). Only if a straight field piping of more than 4-3/4 in. (120 mm) is connected, more than 19-11/16 in. (500 mm) of straight section can be ensured.
- Improper installation may lead to malfunction of the outdoor unit.

8.3. Guidelines for handling stop valve

8.3.1. Cautions on handling the stop valve

- Make sure to keep all stop valves open during operation.
- The figure below shows the name of each part required in handling the stop valve.
- The stop valves are factory closed.
- When handle the stop valves, be careful not to damage the port pipes around (refer to P22).

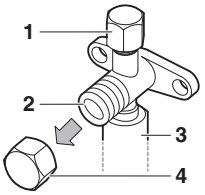

1 Service port and service port cover
2 Stop valve
3 Field piping connection
4 Stop valve cover

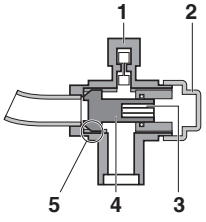

1 Service port
2 Cap
3 Hexagon hole
4 Shaft
5 Seal

8.3.2. How to use the stop valve

Tightening torques

Stop valve size	Tightening torque (Turn clockwise to close)			
	Shaft (valve body)		Cap (valve cover)	Service port
ϕ1/2	5.97-7.30 ft•lbf (8.1-9.9 N•m)	Hexagonal wrench 4 mm	13.3-16.2 ft•lbf (18.0-22.0 N•m)	8.48-10.3 ft•lbf (11.5-13.9 N•m)
ϕ3/4	19.9-24.3 ft•lbf (27.0-33.0 N•m)	Hexagonal wrench 8 mm	16.6-20.3 ft•lbf (22.5-27.5 N•m)	
ϕ1				
ϕ1-1/8		Hexagonal wrench 10 mm		

Opening the stop valve

1 Remove the stop valve cover.

2 Insert a hexagon wrench into the stop valve and turn the stop valve counterclockwise.

3 When the stop valve cannot be turned any further, stop turning. The valve is now open.
- Turn the stop valve (ϕ3/8, ϕ1/2) until the shaft stops. (Opening the valve with excessive force may damage it.)
- Turn the stop valve (ϕ3/4-ϕ1-1/8) until the shaft stops and the designated torque is achieved.

4 Tighten the stop valve cover securely by applying the designated torque.

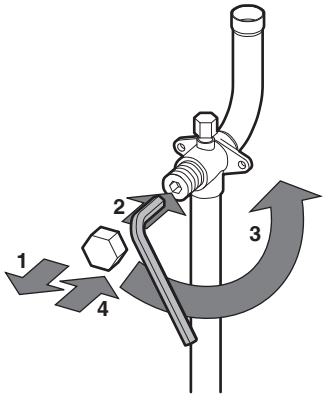

Closing the stop valve

1 Remove the stop valve cover.

2 Insert a hexagon wrench into the stop valve and turn the stop valve clockwise.

3 Turn until the shaft stops by applying the designated torque. The valve is now closed.

4 Tighten the stop valve cover securely by applying the designated torque.

Closing direction

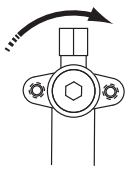

8.3.3. Cautions on handling the stop valve cover

- The stop valve cover is sealed where indicated by the arrow. Take care not to damage it.
- After handling the stop valve, make sure to tighten the stop valve cover securely. For the tightening torque, refer to 8.3.2. How to use the stop valve.
- Check for refrigerant leaks after tightening the stop valve cover.

⚠ CAUTION

- Do not open or close the stop valves if the ambient temperature is < –22°F (–30°C).

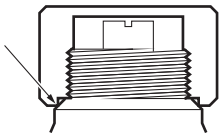

8.3.4. Cautions on handling the service port

- Always use a charge hose equipped with a valve depressor pin, since the service port is a Schrader type valve.
- After handling the service port, make sure to tighten the service port cover securely. For the tightening torque, refer to 8.3.2. How to use the stop valve.
- Check for refrigerant leaks after tightening the service port cover.

9. Field wiring

⚠ NOTE

- All field wiring and components must be installed by a licensed electrician and must comply with relevant local and national regulations.
- Be sure to use a dedicated power circuit. Never use a power supply shared by another appliance.
- Never install a phase-advancing capacitor. As this unit is equipped with an inverter, installing a phase-advancing capacitor will not only deteriorate power factor improvement effect, but also may cause capacitor abnormal heating accident due to high-frequency waves.
- Only proceed with wiring work after blocking off all power.
- Always ground wires in accordance with relevant local and national regulations.
- This machine includes an inverter device. Connect ground and leave charge to eliminate the impact on other devices by reducing noise generated from the inverter device and to prevent leaked current from being charged in the outer shell of the product.
- Do not connect the ground wire to gas pipes, sewage pipes, lightning rods, or telephone ground wires.
  Gas pipes can explode or catch fire if there is a gas leak.
  Sewage pipes: no grounding effect is possible if hard plastic piping is used.
  Telephone ground wires and lightning rods are dangerous when struck by lightning due to abnormal rise in electrical potential in the grounding.
- This equipment can be installed with a Ground-Fault Circuit Interrupter (GFCI). Although this is a recognized measure for additional protection, with the grounding system in North America, a dedicated GFCI is not necessary.
- Electrical wiring must be done in accordance with the wiring diagrams and the description herein.
- Do not operate until refrigerant piping work is completed. Operating the unit before completing piping work could cause the compressor to break.
- Never remove a thermistor, sensor or similar parts when connecting power wiring and transmission wiring.
  (If operated with a thermistor, sensor or similar parts removed, the compressor may be broken down.)
- Never connect the power supply in reverse-phase.

- Make sure the electrical imbalance ratio is no greater than 2%. If it is larger than this, the unit's lifespan will be reduced.
  If the ratio exceeds 4%, the unit will shut down and an malfunction code will be displayed on the indoor remote controller.
- Connect the wire securely using designated wire and fix it with attached clamp without applying external pressure on the terminal parts (terminal for power wiring, terminal for transmission wiring and ground terminal).
- If there exists the possibility of reverse-phase, lose phase, momentary blackout or the power goes on and off while the product is operating, attach a reverse-phase protection circuit locally.
  Running the product in reverse-phase may break the compressor and other parts.

9.1. Power circuit, safety device and cable requirements

- Make sure to apply the rated voltage of 208/230V, 460V or 575V for the unit.
- A power circuit (see the following table) must be provided for connection of the unit. This circuit must be protected with the required safety devices, i.e. a main switch, a slow blow fuse on each phase.
- When using residual current operated circuit breakers, be sure to use a high-speed type (0.1 seconds or less) 200 mA rated residual operating current.
- Use copper conductors only.
- Use insulated wire for the power cord.
- Select the power supply cable type and size in accordance with relevant local and national regulations.

Model name	Phase and frequency	Voltage	Minimum circuit amp.	Maximum overcurrent protective device	Transmission line selection
REYQ72XATJU	ϕ3, 60Hz	208/230V	38.1	45	AWG18-16
REYQ96XATJU	ϕ3, 60Hz	208/230V	38.1	45	AWG18-16
REYQ120XATJU	ϕ3, 60Hz	208/230V	43.0	50	AWG18-16
REYQ144XATJU	ϕ3, 60Hz	208/230V	58.3	70	AWG18-16
REYQ168XATJU	ϕ3, 60Hz	208/230V	61.9	70	AWG18-16
REYQ192XATJU	ϕ3, 60Hz	208/230V	38.1+38.1	45+45	AWG18-16
REYQ216XATJU	ϕ3, 60Hz	208/230V	38.1+43.0	45+50	AWG18-16
REYQ240XATJU	ϕ3, 60Hz	208/230V	43.0+43.0	50+50	AWG18-16
REYQ264XATJU	ϕ3, 60Hz	208/230V	43.0+58.3	50+70	AWG18-16
REYQ288XATJU	ϕ3, 60Hz	208/230V	58.3+58.3	70+70	AWG18-16
REYQ312XATJU	ϕ3, 60Hz	208/230V	58.3+61.9	70+70	AWG18-16
REYQ336XATJU	ϕ3, 60Hz	208/230V	61.9+61.9	70+70	AWG18-16
REYQ360XATJU	ϕ3, 60Hz	208/230V	43.0+43.0+43.0	50+50+50	AWG18-16
REYQ384XATJU	ϕ3, 60Hz	208/230V	43.0+43.0+58.3	50+50+70	AWG18-16
REYQ408XATJU	ϕ3, 60Hz	208/230V	43.0+58.3+58.3	50+70+70	AWG18-16
REYQ432XATJU	ϕ3, 60Hz	208/230V	58.3+58.3+58.3	70+70+70	AWG18-16
REYQ456XATJU	ϕ3, 60Hz	208/230V	58.3+58.3+61.9	70+70+70	AWG18-16
REYQ72XAYDU	ϕ3, 60Hz	460V	18.9	25	AWG18-16
REYQ96XAYDU	ϕ3, 60Hz	460V	21.1	25	AWG18-16
REYQ120XAYDU	ϕ3, 60Hz	460V	21.1	25	AWG18-16
REYQ144XAYDU	ϕ3, 60Hz	460V	27.9	40	AWG18-16
REYQ168XAYDU	ϕ3, 60Hz	460V	31.1	40	AWG18-16
REYQ192XAYDU	ϕ3, 60Hz	460V	21.1+21.1	25+25	AWG18-16
REYQ216XAYDU	ϕ3, 60Hz	460V	21.1+21.1	25+25	AWG18-16
REYQ240XAYDU	ϕ3, 60Hz	460V	21.1+21.1	25+25	AWG18-16
REYQ264XAYDU	ϕ3, 60Hz	460V	21.1+27.9	25+40	AWG18-16
REYQ288XAYDU	ϕ3, 60Hz	460V	27.9+27.9	40+40	AWG18-16
REYQ312XAYDU	ϕ3, 60Hz	460V	27.9+31.1	40+40	AWG18-16
REYQ336XAYDU	ϕ3, 60Hz	460V	31.1+31.1	40+40	AWG18-16
REYQ360XAYDU	ϕ3, 60Hz	460V	21.1+21.1+21.1	25+25+25	AWG18-16
REYQ384XAYDU	ϕ3, 60Hz	460V	21.1+21.1+27.9	25+25+40	AWG18-16
REYQ408XAYDU	ϕ3, 60Hz	460V	21.1+27.9+27.9	25+40+40	AWG18-16
REYQ432XAYDU	ϕ3, 60Hz	460V	27.9+27.9+27.9	40+40+40	AWG18-16
REYQ456XAYDU	ϕ3, 60Hz	460V	27.9+27.9+31.1	40+40+40	AWG18-16
REYQ72XAYCU	ϕ3, 60Hz	575V	15.1	20	AWG18-16
REYQ96XAYCU	ϕ3, 60Hz	575V	16.8	20	AWG18-16
REYQ120XAYCU	ϕ3, 60Hz	575V	18.2	25	AWG18-16
REYQ144XAYCU	ϕ3, 60Hz	575V	22.3	30	AWG18-16
REYQ168XAYCU	ϕ3, 60Hz	575V	24.9	30	AWG18-16
REYQ192XAYCU	ϕ3, 60Hz	575V	16.8+16.8	20+20	AWG18-16
REYQ216XAYCU	ϕ3, 60Hz	575V	16.8+18.2	20+25	AWG18-16
REYQ240XAYCU	ϕ3, 60Hz	575V	18.2+18.2	25+25	AWG18-16
REYQ264XAYCU	ϕ3, 60Hz	575V	18.2+22.3	25+30	AWG18-16
REYQ288XAYCU	ϕ3, 60Hz	575V	22.3+22.3	30+30	AWG18-16
REYQ312XAYCU	ϕ3, 60Hz	575V	22.3+24.9	30+30	AWG18-16
REYQ336XAYCU	ϕ3, 60Hz	575V	24.9+24.9	30+30	AWG18-16
REYQ360XAYCU	ϕ3, 60Hz	575V	18.2+18.2+18.2	25+25+25	AWG18-16
REYQ384XAYCU	ϕ3, 60Hz	575V	18.2+18.2+22.3	25+25+30	AWG18-16
REYQ408XAYCU	ϕ3, 60Hz	575V	18.2+22.3+22.3	25+30+30	AWG18-16
REYQ432XAYCU	ϕ3, 60Hz	575V	22.3+22.3+22.3	30+30+30	AWG18-16

9.2. Wiring connection example for whole system

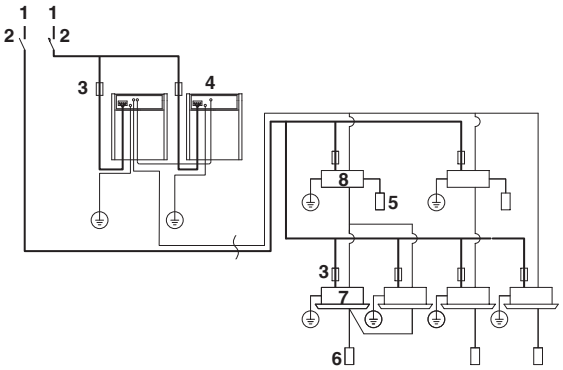

1 Power supply
2 Main switch
3 Fuse or circuit breaker
4 Outdoor unit
5 COOL/HEAT selector
6 Remote controller
7 Indoor unit
8 Branch Selector unit

This image is intended as an example only. Please follow local and national electrical code.

⚠ NOTE

- Make sure the low voltage wiring (i.e. for the remote controller, between units) and the power wiring do not pass near each other, keeping them at least 2 in. (51 mm) apart.
  Proximity may cause electrical interference, malfunctions, and breakage.
- Be sure to connect the power wiring to the power wiring terminal block and secure it as described in 9.5. Power wiring connection procedure.
- Transmission wiring should be secured as described in 9.4. Transmission wiring connection procedure.
- Secure wiring with clamp such as insulation lock ties to avoid contact with piping.
- Shape the wires to prevent the structure such as the control box cover deforming. And close the cover firmly.
- All field wiring is to be procured on site.

9.3. Leading wire procedure

- The power wiring and ground wiring are passed out from the power wiring hole on the front (knock hole).
- The transmission wiring is passed out from the wiring hole (knock hole) on the front of the unit.

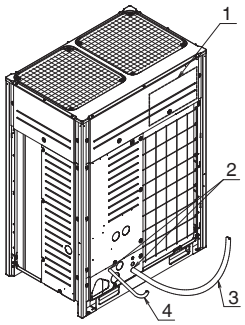

1 Wiring diagram printed on the back of the control box cover.
2 Knockout hole
3 Power line
4 Transmission line

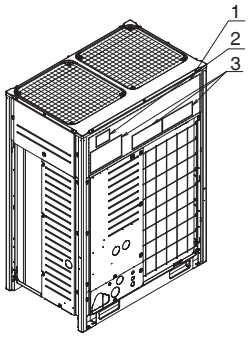

1 Control box cover
2 Inspection door
3 [Service precautions] Label location

NOTE

- Open the knock holes with a hammer or similar tool.
- After knocking out the holes, we recommend you remove any burrs and paint the holes with repair paint to prevent rusting. (Refer to the figure on page 19.)
- When passing wiring through the knock holes, remove burrs around the knock holes and protect the wiring with protective tape. (Refer to the figure on page 19.)
- If small animals might enter the unit, block off any gaps (hatching parts in the figure on page 19) with material (field supply).

9.4. Transmission wiring connection procedure

- Referring to the figure below, connect the transmission wiring between outdoor unit and indoor unit, outdoor unit and outdoor unit of other system, outdoor unit and outdoor unit of same system.

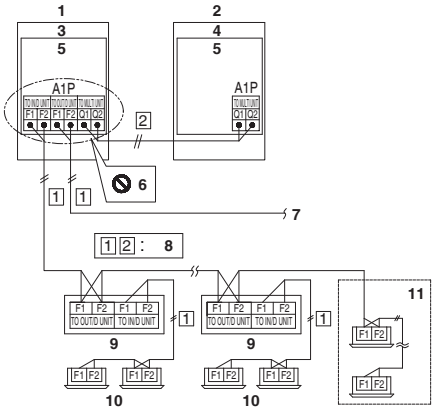

1 Master unit (*)
2 Sub unit (*)
3 Outdoor unit A
4 Outdoor unit B
5 Control box
6 Never connect the power wire.
7 To outdoor unit of other system
8 Use duplex wires (No polarity)
9 Branch Selector unit
10 Indoor unit
11 Indoor unit (Cooling only)
(*) : The outdoor unit that connect the transmission wiring to Branch Selector unit is Master unit of the multi system. And the other units are Sub unit. (In this figure, outdoor unit A is the Master unit.)
Check operation in installation work, onsite settings and so on are done by operating the printed circuit board (A1P) of Master unit.

NOTE

- Do not connect the power wiring to terminals for the transmission wiring. Doing so would destroy the entire system.
- Wiring to the indoor unit by way of Branch Selector unit should be wired to F1 and F2 on the outdoor unit's terminal block (A1P_X1M).
- The above wiring should be wired using AWG18-16 stranded, non-shielded wiring.
- All transmission wiring is to be procured onsite.
- When connecting wires to the terminal block on the printed circuit board, too much heat or tightening could damage the printed circuit board. Attach with care.
  See the table below for the tightening torque of the transmission wiring terminals.

Screw size	Tightening torque
M3.5 (A1P)	0.59-0.71 ft•lbf (0.8-0.97 N•m)

- Transmission wiring (about the symbol 1-2, see the foregoing figure) should be done within the following limitations.
  If they are exceeded, transmission problems may occur.
  1 Between outdoor unit and Branch Selector (indoor) unit
  Between outdoor unit and outdoor unit of other systems
  Max. wiring length : 3280 ft. (1000 m)
  Max. total wiring length : 6560 ft. (2000 m)
  Max. no. of branches : 16
  [Note] No branch is allowed after a branch. See the following figure.
  Max. no. of outdoor units of other system that can be connected : 10

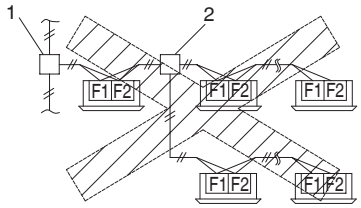

1 Branch
2 Branch after branch

  2 Between outdoor unit and outdoor unit of same system
  Max. wiring length : 98 ft. (30 m)

- The transmission wiring inside the control box should be secured using the clamp (1) as shown in the figure below.

REYQ72-168X type

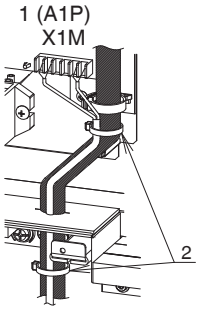

1 In the control box
2 Clamp (1) (accessory)

- Outside the units, the transmission wiring must be finished simultaneously with the local refrigerant piping, and wound with tape (field supply) as shown in the figure below.

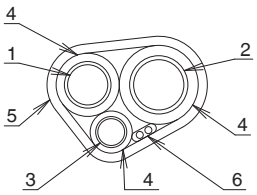

1 Suction gas pipe
2 High/low pressure gas pipe
3 Liquid pipe
4 Insulation material
5 Finishing tape
6 Transmission wiring

- For multi system:

1 Transmission wiring between outdoor units in the same piping system must be connected to terminals Q1 and Q2 (TO MULTI UNIT).
Connecting the wires to the F1, F2 (TO OUT/D UNIT) terminals results in system malfunction.

2 Wiring to other systems should be connected to terminals F1 and F2 (TO OUT/D UNIT) on the printed circuit board of the master unit. The outdoor unit that connects transmission wiring to indoor unit is the master unit. The others are sub unit.

9.5. Power wiring connection procedure

- Be sure to connect the power supply wiring to the power supply terminal block and hold it in place using the included clamp as shown in the figure below.
- The L1, L2 and L3 phases of the power wiring should be secured separately to the hook using the included clamp (1).
- The ground wiring should be bound to the power wiring using the included clamp (1) to prevent outside force from being applied to the terminal area.

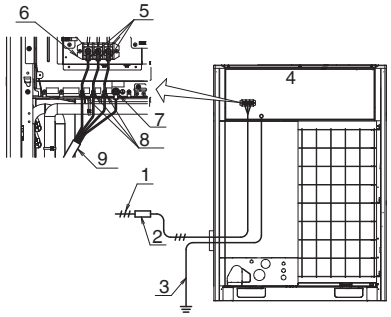

1 Power supply
(MODEL XATJU : 3-208/230V 60 Hz)
(MODEL XAYDU : 3-460V 60 Hz)
(MODEL XAYCU : 3-575V 60 Hz)
2 Branch switch, Overcurrent breaker
3 Ground wire
4 Control box
5 Attach insulation sleeves
6 Power supply terminal block
7 Ground terminal
8 Clamp (1) (accessory)
9 Vinyl tube (accessory)

⚠ CAUTION

- Be sure to use crimp-style terminal with insulating sleeves for connections. (See the figure below.)

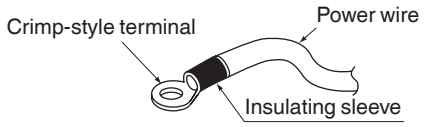

- For wiring, use the designated power wire and connect firmly, then secure to prevent outside pressure being exerted on the terminal board.
- Use an appropriate screwdriver for tightening the terminal screws. A screwdriver with a small head will strip the head and make proper tightening impossible.
- Over-tightening the terminal screws may break them.
See the following table for the tightening torque of the terminal screws.

Screw size	Tightening torque
M8 Power terminal	4.20-5.09 ft•lbf (5.7-6.9 N•m)
M8 Ground terminal	7.15-8.63 ft•lbf (9.7-8.63 N•m)

- When pulling the ground wire out, wire it so that it comes through the cut out section of the cup washer. (See the figure below.) An improper ground connection may prevent a good ground from being achieved.

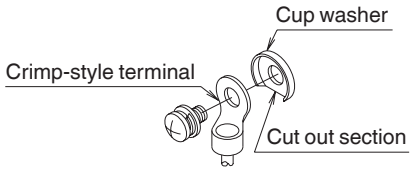

- When 2 wires are connected to a single terminal, connect them so that the rear sides of the crimp contacts face each other. Also, make sure the thinner wire is on top, securing the 2 wires simultaneously to the resin hook using the included clamp (1).

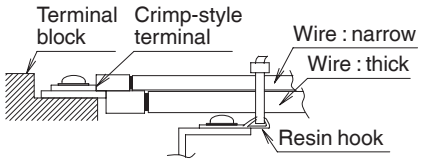

9.6. Procedure for Wiring Inside Units

- Referring to the figure below, secure and wire the power and transmission wiring using the included clamp (1), (2) and (3).
- Wire so that the ground wiring does not come into contact with the compressor lead wiring.
If they touch, this may have an adverse effect on other devices.
- The transmission wiring must be at least 2 in. (51 mm) away from the power wiring.
- Route wiring so that it does not come into contact with the high-temperature pipes (indicated by the hatching in the figure below) or the port pipes (see figure below).

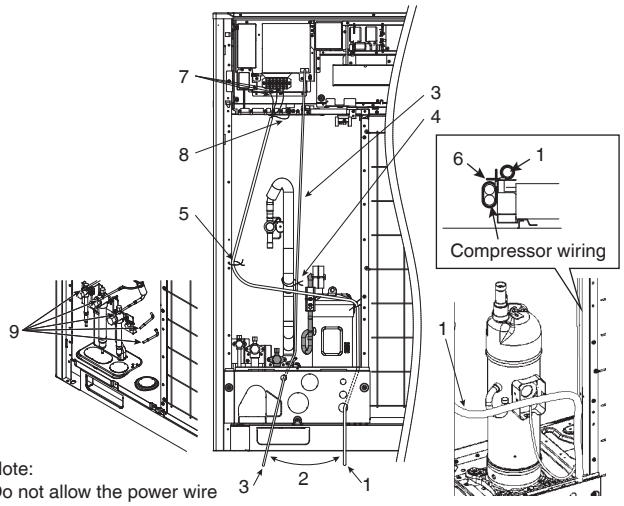

Note:
Do not allow the power wire to come into contact with the port pipe.

1	Power/ground wires	6	Clamp (3) (accessory)
2	Clear over 2 in. (50 mm)	7	Power wiring
3	Transmission wiring	8	Ground wire
4	Clamp (1) (accessory)	9	Port pipes
5	Clamp (2) (accessory)		

NOTE

Do not touch the port pipes during wiring work. Damages of pipes may cause refrigerant leak.

Precautions when knocking out knockout holes

- To punch out a knockout hole, hit it with a hammer.
- Open an appropriate hole as needed.
- After knocking out the holes, trim off the burr, then we recommend you to paint the edges and areas around the edges using the repair paint to prevent rusting.
- Power line: Open a knockout hole as shown at right and connect it using a conduit.
  Choose an appropriate knockout hole for conduit size suitable for the power and ground line to be used.
- Transmission line: Connect it using a conduit in the knockout hole on the left.

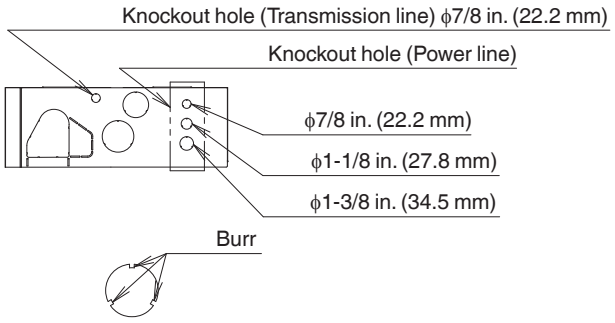

NOTE

After wiring work is completed, check to make sure there are no loose connections among the electrical parts in the control box.

10. Air tight test and vacuum drying

- After finished piping work, carry out air tight test and vacuum drying.

NOTE

- Always use nitrogen gas for the air tightness test.
- Absolutely do not open the stop valve until the main power circuit insulation measurement has been completed. (Measuring after the stop valve is opened will cause the insulation value to drop.)

<Needed tools>

Gauge manifold Charge hose valve	• To prevent entry of any impurities and insure sufficient pressure resistance, always use the special tools dedicated for R410A. • Use charge hose that have pushing stick for connecting to service port of stop valves.
Vacuum pump	• The vacuum pump for vacuum drying should be able to lower the pressure to 500 microns. • Take care the pump oil never flow backward into the refrigerant pipe during the pump stops.

<The system for airtight test and vacuum drying>

- Referring to the figure below, connect a nitrogen tank, refrigerant tank, and a vacuum pump to the outdoor unit.
  The refrigerant tank and the charge hose connection to service port of all valves in the figure below are needed in
  14. Charging refrigerant on page 26.

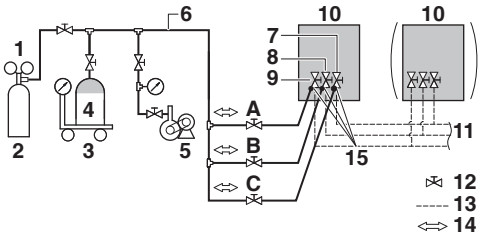

1	Gauge manifold
2	Nitrogen
3	Measuring instrument
4	Refrigerant R410A tank (siphon system)
5	Vacuum pump
6	Charge hose
7	High/low pressure gas pipe stop valve
8	Suction gas pipe stop valve
9	Liquid pipe stop valve
10	Outdoor unit
11	To Branch Selector unit (indoor unit)
12	Stop valve
13	Field piping
14	Gas flow
15	Stop valve service port
A	Valve A
B	Valve B
C	Valve C

NOTE

- The air-tightness test and vacuum drying should be done using the service ports of suction gas pipe, high/low pressure gas pipe and liquid pipe stop valve. See the [R410A] Label attached to the front panel of the outdoor unit for details on the location of the service port (see the figure below).

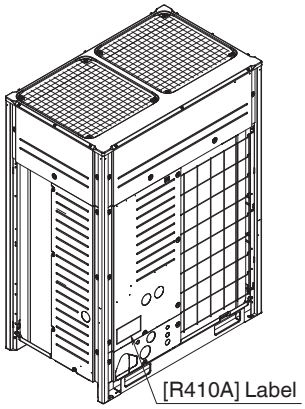

- See 14.3. Method for adding refrigerant on page 28 for details on handling the stop valve.

<Air tight test>

Pressurize the suction gas pipe, high/low pressure gas pipe and liquid pipe from the service ports of each stop valve to 550 psi (3.8 MPa) (do not pressurize more than 550 psi (3.8 MPa)). If the pressure does not drop within 24 hours, the system passes the test.
If there is a pressure drop, check for leaks, make repairs and perform the air tight test again.

<Vacuum drying>

Evacuate the system from the suction gas pipe, high/low pressure gas pipe and liquid pipe stop valve service ports by using a vacuum pump for more than 2 hours and bring the system to 500 microns or less. After keeping the system under that condition for more than 1 hour, check if the vacuum gauge rises or not. If it rises, the system may either contain moisture inside or have leaks.

NOTE

During the rainy season, moisture might enter the piping. If working during a rainy season and the work takes long enough for condensation to form inside the pipes, take the following precautions:
After evacuating the system for 2 hours, pressurize the system to 375,000 microns (vacuum break) with nitrogen gas and evacuate the system again using the vacuum pump for 1 hour to 500 microns or less (vacuum drying).
If the system cannot be evacuated to 500 microns within 2 hours, repeat the operation of vacuum break and vacuum drying.
Then, after leaving the system in a vacuum for 1 hour, confirm that the vacuum gauge does not rise.

11. Pipe insulation

NOTE

Pipe insulation thickness provided below are guidelines only. Pipes must be insulated with the appropriate thickness of insulation per applicable local/state or national codes.

- Insulation of pipes should be done after performing 10. Air tight test and vacuum drying on page 22.
- Always insulate the suction gas pipe, high/low pressure gas pipe, liquid pipe and pipe connections.
- Failing to insulate the pipes may cause leaking or burns.
  Be sure to use insulation designed for HVAC equipment.
- Reinforce the insulation on the refrigerant piping according to the installation environment. Condensation might form on the surface of the insulation. Refer to the below.
  - Ambient temperature : 86°F (30°C), humidity : 75% to 80% RH : minimum thickness : 9/16 in. (15 mm).
  - If the ambient temperature exceeds 86°F (30°C) and the humidity 80% RH, then the minimum thickness is 3/4 in. (20 mm).
    See the Engineering Data Book for detail.
- If there is a possibility that condensation on the stop valve might drip down into the indoor unit through gaps in the insulation and piping because the outdoor unit is located higher than the indoor unit, this must be prevented by caulking the connections. (Refer to the following figure.)

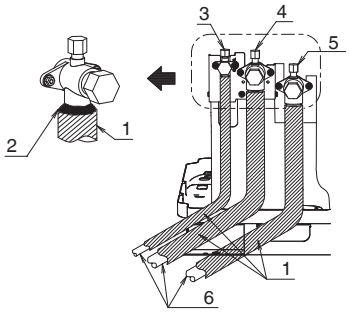

1 Insulation material
2 Caulking, etc.
3 Liquid pipe stop valve
4 Suction gas pipe stop valve
5 High/low pressure gas pipe stop valve
6 Connection pipe

12. Checking of device and installation conditions

Be sure to check the followings.

For those doing electrical work

1 Make sure there is no faulty transmission wiring or loosening of a nut.
See 9.4. Transmission wiring connection procedure on page 20.

2 Make sure there is no faulty power wiring or loosening of a nut.
See 9.5. Power wiring connection procedure on page 21.

3 Has the insulation of the main power circuit deteriorated?
Measure the insulation and check the insulation is above regular value in accordance with relevant local and national regulations.

For those doing pipe work

1 Make sure piping size is correct.
See 7.2. Selection of piping material on page 9 and 7.4. Selection of refrigerant branch kits on page 10.

2 Make sure insulation work is done.
See 11. Pipe insulation.

3 Make sure there is no faulty refrigerant piping.
See 8. Precautions on refrigerant piping on page 14.

13. Making field settings

To continue the configuration of the outdoor units, it is required to give some input to the printed circuit board of the unit. This chapter will describe how manual input is possible by operating the push buttons/ DIP switches on the printed circuit board and reading the feedback from the 7 segment displays.
For VRV REYQ-X series it is alternatively possible to make several commissioning field settings through a personal computer interface (for this, option 999482P3 is required). The installer can prepare the configuration (off-site) on PC and afterwards upload the configuration to the system. How to connect the cable is described in 13.3. Connecting the PC configurator to the outdoor unit on page 26.

The contents of the actual settings is discussed and explained in 15.2. Monitoring function and field settings on page 31.

13.1. Accessing the push buttons on the printed circuit board

It is not required to open the complete control box to access the push buttons on the printed circuit board and read out the 7 segment display (s).

To access you can remove the service window cover (see figure). Now you can open the inspection door of the control box cover (see figure). You can see 3 push buttons and 3 seven-segment displays and DIP switches.

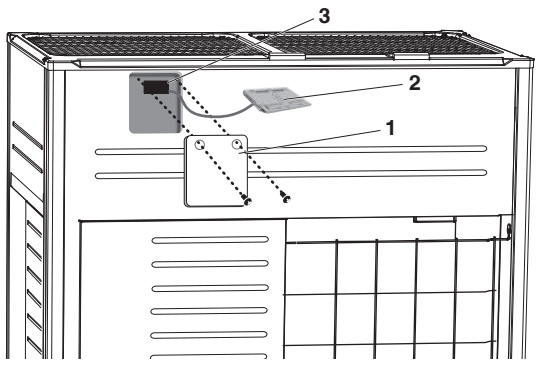

1 Service window cover
2 Inspection door
3 Main printed circuit board with 3 seven-segment display and 3 push buttons

Operate the switches and push buttons with an insulated stick (such as a closed ballpoint pen) to avoid touching of live parts.

Location of the segment displays, buttons and DIP switches:

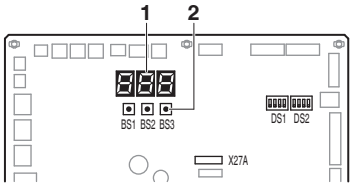

BS1	for changing setting mode
BS2, BS3	for changing field setting
DS1, DS2	DIP switches
1	7 segment displays (3×)
2	Push buttons

Segment display indications:

Off
Blinking
On

13.2. Operating the push buttons and DIP switches on the printed circuit board

13.2.1. Operating the push buttons

By operating the push buttons it is possible to:
- Perform special actions (test run etc.).
- Perform field settings (demand operation, low noise, etc).

Below procedure explains how to operate the push buttons to reach the required mode in the menu, select the correct setting and modify the value of the setting. This procedure can be used any time special settings and regular field setting are discussed in this manual (see 15.2. Monitoring function and field settings on page 31).

Setting definition: [A-B]=C; A=mode; B=setting; C=setting value. A, B and C are numerical values for field settings. Parameter C has to be defined. It can be a chosen from a set (0, 1, 2, 3, 4, 5, …) or regarded as an ON/OFF (1 or 0) depending on the contents. This is informed when the field setting is explained (see 15.2. Monitoring function and field settings on page 31).

INFORMATION

During special operation (e.g. test run) or when an malfunction happened, information will contain letters and numerical values.

Functions of the push button switches which are located on the main printed circuit board (A1P)

Turn on the power supply of the outdoor unit and all indoor units. When the communication between indoor units and outdoor unit (s) is established and normal, the segment indication state will be as follows (default situation when shipped from factory):

When turning on the power supply, the display flashes on and off. First checks of the power supply are executed (1-2 minutes).

When no trouble occurs: lighted as indicated (8-10 minutes).

Ready for operation: blank display indication as indicated.

When above situation cannot be confirmed after 12 minutes, the malfunction code can be checked on the indoor unit user interface and the outdoor unit segment display. Solve the malfunction code accordingly. The communication wiring should be checked at first.

INFORMATION

Be sure to turn the power on at least 6 hours before operation in order to have power running to the crank case heater.

Accessing modes

BS1 is used to change the mode you want to access.

- Access mode 1
  Push BS1 one time. Segment indication changes to:

- Access mode 2
  Push BS1 for at least 5 seconds. Segment indication changes to:

INFORMATION

If you get confused in the middle of the process, push BS1.
Then it returns to idle situation (no indication on segment displays: blank, refer to Functions of the push button switches which are located on the main printed circuit board (A1P) on page 24).

Mode 1

Mode 1 is used to set basic settings and to monitor the status of the unit (15.2. Monitoring function and field settings on page 31).

- Changing and access the setting in mode 1:
  Once mode 1 is selected (push BS1 one time), you can select the wanted setting. It is done by pushing BS2. Accessing the selected setting's value is done by pushing BS3 one time.
- To quit and return to the initial status, press BS1.

Example:

Checking the content of parameter [1-10] (to know how many indoor units are connected to the system).

[A-B]=C in this case defined as: A=1; B=10; C=the value we want to know/monitor:

- Make sure the segment indication is displayed in operational default mode as shipped from factory.
- Push BS1 one time; result segment display:

  Result: mode 1 is accessed.
- Push BS2 10 times; result segment display:

  Result: mode 1 setting 10 is addressed.
- Push BS3 one time; the value which is returned (depending on the actual field situation), is the amount of indoor units which are connected to the system.
  Result: mode 1 setting 10 is addressed and selected, return value is monitored information.
- To leave the monitoring function, push BS1 one time, you will return to the default situation when shipped from factory.

Mode 2

Mode 2 is used to set field settings of the outdoor unit and system.

- Changing and access the setting in mode 2:
  Once mode 2 is selected (push BS1 for more than 5 seconds), you can select the wanted setting. It is done by pushing BS2. Accessing the selected setting's value is done by pushing BS3 one time.
- To quit and return to the initial status, press BS1.
- Changing the value of the selected setting in mode 2:
  - Once mode 2 is selected (push BS1 for more than 5 seconds) you can select the wanted setting. It is done by pushing BS2.
  - Accessing the selected setting's value is done by pushing BS3 one time.
  - Now BS2 is used to select the required value of the selected setting.
  - When the required value is selected, you can define the change of value by pushing BS3 one time.
  - Press BS3 again to start operation according to the chosen value.

Example:

Checking the content of parameter [2-18] (to define the high static pressure setting of the outdoor unit's fan).

[A-B]=C in this case defined as: A=2; B=10; C=the value we want to know/change

Make sure the segment indication is as during normal operation (default situation when shipped from factory).

- Push BS1 for over 5 seconds; result segment display:

  Result: mode 2 is accessed.
- Push BS2 18 times; result segment display:

  Result: mode 2 setting 18 is addressed.
- Push BS3 one time; the value which is returned (depending on the actual field situation), is the status of the setting. In the case of [2-18], default value is 0, which means the function is not active.
  Result: mode 2 setting 18 is addressed and selected, return value is the current setting situation.
- To change the value of the setting, push BS2 till the required value appears on the segment indication. When achieved, define the setting value by pushing BS3 one time. To start operation according to the chosen setting, confirm again by pushing BS3.
- To leave the monitoring function, push BS1 two times, you will return to the default situation when shipped from factory.

13.2.2. Operating the DIP switches

By operating the DIP switches it is possible to:

	What to do with DIP switch DS1
1	Cool/Heat selector (refer to the manual of the Cool/Heat selector switch) OFF=not installed=factor setting
2-4	NOT USED DO NOT CHANGE THE FACTORY SETTING
	What to do with DIP switch DS2
1-4	NOT USED DO NOT CHANGE THE FACTORY SETTING

13.3. Connecting the PC configurator to the outdoor unit

Connection of the optional PC configurator cable to the outdoor unit has to be done on A1P. Connect the 999482P3 cable to the 5-pin blue connector X27A.

⚠ CAUTION

Works executed on the outdoor unit are best done under dry weather conditions to avoid water ingress.

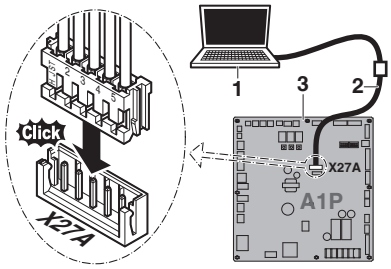

1 PC
2 Cable (999482P3)
3 Main printed circuit board

14. Charging refrigerant

14.1. Precautions

⚠ NOTE

- Refrigerant cannot be charged until field wiring has been completed.
- Refrigerant may only be charged after performing the leak test and the vacuum drying.
- When charging a system, care shall be taken that its maximum permissible charge is never exceeded, in view of the danger of liquid hammer.
- Charging a system with an unsuitable substance as refrigerant may cause explosions and accidents, so always ensure that the appropriate refrigerant R410A is charged.
- Refrigerant containers shall be opened slowly.
- Always use protective gloves and protect your eyes when charging refrigerant.
- When the refrigerant system is to be opened, refrigerant must be treated according to the applicable legislation.

⚠ DANGER

See Safety considerations on page i.

- To avoid compressor breakdown, do not charge the refrigerant more than the specified amount.
- This outdoor unit is factory charged with refrigerant and depending on pipe sizes and pipe lengths systems require additional charging of refrigerant. See 14.2. Calculating the additional refrigerant charge.
- In case recharge is required, refer to the nameplate of the unit. It states the type of refrigerant and necessary amount.

14.2. Calculating the additional refrigerant charge

⚠ NOTE

The refrigerant charge of the system must be less than 210 lbs. (100 kg). This means that in case the calculated total refrigerant charge is equal to or more than 209 lbs. (95 kg) you must divide your multiple outdoor system into smaller independent systems, each containing less than 209 lbs. (95 kg) refrigerant charge. For factory charge, refer to the unit nameplate.

14.2.1. How to calculate the additional refrigerant to be charged

Additional refrigerant to be charged=R (lbs.). R should be rounded off in units of 0.1 lbs.

$R=[(X_1\times\phi7/8)\times0.249+(X_2\times\phi3/4)\times0.175+(X_3\times\phi5/8)\times0.121+(X_4\times\phi1/2)\times0.081+(X_5\times\phi3/8)\times0.040+(X_6\times\phi1/4)\times0.015]\times1.04+[A]+[B]+[C]$

$X_{1...6}$ =Total length (ft. (m)) of liquid piping size at ϕa

* In units of 0.1 kg, additional refrigerant to be charged=R (kg).
$R=[(X_1\times\phi22.2)\times0.37+(X_2\times\phi19.1)\times0.26+(X_3\times\phi15.9)\times0.18+(X_4\times\phi12.7)\times0.12+(X_5\times\phi9.5)\times0.059+(X_6\times\phi6.4)\times0.022]\times1.04+[A]+[B]+[C]$

Parameter [A] Refrigerant amount for Branch Selector units	
Branch Selector unit model	**Refrigerant amount**
BS4Q54T	0.7 lbs./unit (0.3 kg/unit)
BS6Q54T	0.9 lbs./unit (0.4 kg/unit)
BS8Q54T	1.1 lbs./unit (0.5 kg/unit)
BS10Q54T	1.5 lbs./unit (0.7 kg/unit)
BS12Q54T	1.8 lbs./unit (0.8 kg/unit)
BSQ36T	0.1 lbs./unit (0.05 kg/unit)
BSQ60T	0.2 lbs./unit (0.1 kg/unit)
BSQ96T	0.4 lbs./unit (0.2 kg/unit)

Parameter [B]	
Outdoor unit	**Refrigerant amount**
REYQ72XA	9.7 lbs./unit (4.4 kg/unit)
REYQ96XA	9.7 lbs./unit (4.4 kg/unit)
REYQ120XA	9.7 lbs./unit (4.4 kg/unit)
REYQ144XA	9.7 lbs./unit (4.4 kg/unit)
REYQ168XA	9.7 lbs./unit (4.4 kg/unit)

Parameter [C] Refrigerant amount by field piping length and indoor units capacity				
Field piping length	**Total indoor unit capacity connection ratio**	**Refrigerant amount Total outdoor unit capacity type**		
		REYQ72-144X	**REYQ168-288X**	**REYQ312-456X**
<295.3 ft. (90 m)	≤85%	0.0		
	>85%	The smaller of [D] or 5.51 lbs. (2.5 kg)	The smaller of [D] or 6.61 lbs. (3.0 kg)	The smaller of [D] or 7.50 lbs. (3.4 kg)
≥295.3 ft. (90 m)	≤85%	0.0		
	>85%	2.20 lbs. (1.0 kg)		

Parameter [D]										
Indoor unit capacity type	FXMQ type									
	07	09	12	15	18	24	30	36	48	54
Refrigerant amount (lbs. (kg)/unit)	0.06 (0.03)	0.03 (0.014)	0.14 (0.06)	0.29 (0.13)	0.25 (0.11)	0.16 (0.07)	0.33 (0.15)	0.25 (0.11)	0.08 (0.04)	0.00 (0.00)
Indoor unit capacity type	FXFQ type									Others
	07	09	12	15	18	24	30	36	48	
Refrigerant amount (lbs. (kg)/unit)	0.36 (0.16)	0.33 (0.15)	0.30 (0.14)	0.26 (0.12)	0.61 (0.28)	0.53 (0.24)	0.61 (0.28)	0.53 (0.24)	0.36 (0.16)	0.00 (0.00)

Example for refrigerant branch using REFNET joint and REFNET header for systems and each pipe length is shown below. (Example 7.5. System piping (length) limitations on page 11.)

Outdoor system: REYQ240XAYCU (REYQ120XAYCU+REYQ120XAYCU)

Branch Selector units

BS4Q54T×1, BSQ60T×1, BSQ96T×1

Indoor units

FXMQ type: 18×1, 24×1, 30×1, 36×2

FXFQ type: 36×2

Other: 48×1

Liquid piping

a: ϕ3/4×60 ft.	e: ϕ1/4×15 ft.	i: ϕ3/8×20 ft.	m: ϕ3/8×15 ft.	r: ϕ1/2×10 ft.
b: ϕ5/8×20 ft.	f: ϕ3/8×10 ft.	j: ϕ3/8×10 ft.	n: ϕ3/8×15 ft.	t: ϕ1/2×15 ft.
c: ϕ1/2×10 ft.	g: ϕ3/8×10 ft.	k: ϕ3/8×10 ft.	o: ϕ3/8×10 ft.	
d: ϕ3/8×15 ft.	h: ϕ3/8×15 ft.	ℓ: ϕ3/8×15 ft.	p: ϕ3/8×10 ft.	

Total length of liquid piping: 285 ft.

Total capacity of indoor unit: 110.0%

[D] = 0.25×1 + 0.16×1 + 0.33×1 + 0.25×2 + 0.53×2 + 0.00×1 = 2.30 lbs.

(FXMQ18x1, FXMQ24x1, FXMQ30x1, FXMQ36x2, FXFQ36x2, Other48x1)

[C]: The smaller of [D] or 6.61 lbs. = 2.30 lbs.

R = (60×0.175 + 20×0.121 + 35×0.081 + 155×0.040 + 15×0.015)×1.04 + 1.3 + 19.4 + 2.30

(a, b, c, r, t, d, f, g, h, i, j, k, ℓ, m, n, o, p, e, [A], [B], [C])

= 46.067 ⇒ 46.1 lbs.

Round off in units of 0.1 lbs.

INFORMATION

Piping length is considered by the distance from the outdoor unit to the farthest indoor unit.

14.3. Method for adding refrigerant

14.3.1. Flow chart

Step 1
Calculate additional refrigerant charge amount: R (lbs. (kg))

Step 2+3
- Close valves B and C
- Open valve A to the liquid line
- Execute pre-charging amount: Q (lbs. (kg))
- Disconnect the manifold from the suction gas line and the high/low pressure gas line

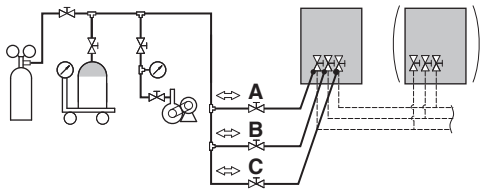

R=Q

Step 4a
- Close valve A
- Charging is finished
- Fill in the amount on the additional refrigerant charge label
- Go to test run

R<Q

Refrigerant overcharge happened, recover refrigerant to reach R=Q

R>Q

Step 4b
Close valve A

R>Q

Step 5
Open all outdoor unit stop valves

Step 6
Activate field setting [2-20]=1
Unit will start manual refrigerant charging operation.

- Open valve B
  Adjust refrigerant charge speed as 2.2 lb/minute
- Charge remaining amount of refrigerant P (lbs. (kg))
  R=Q+P

- Close valve B
- Push BS3 to stop manual charging
- Charging is finished
- Fill in the amount on the additional refrigerant charge label
- Go to test run

See figure location of valves next page for more information refer to the text in this chapter.

Be sure to charge the specified amount of refrigerant in liquid state. Since this refrigerant is a mixed refrigerant, adding it in gas form may cause the refrigerant composition to change, preventing normal operation.

- Before charging, check whether the refrigerant cylinder is equipped with a siphon tube or not.

If a siphon tube is equipped, change the liquid refrigerant with the cylinder in upright position.

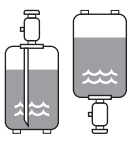

If a siphon tube is not equipped, change the liquid refrigerant with the cylinder in upside-down position.

- Be sure to use tools exclusively for R410A to ensure required pressure resistance and to prevent foreign materials from mixing into the system.

⚠ NOTE
- Charging with an unsuitable substance may cause explosions and accidents, so always make sure that the appropriate refrigerant (R410A) is charged.
- Refrigerant containers must be opened slowly.

⚠ CAUTION
- When charging a system, charging over the permissible quantity may cause liquid hammer.
- Always use protective gloves and protect your eyes when charging refrigerant.
- When the refrigerant charging procedure is done or when pausing, close the valve of the refrigerant tank immediately. If the tank is left with the valve open, the amount of refrigerant which was properly charged may get off point. More refrigerant may be charged by any remaining pressure after the unit has stopped.

NOTE

- If the power of some units is turned off, the charging procedure cannot be finished properly.
- In case of a multiple outdoor system, turn on the power of all outdoor units.
- Make sure to turn ON the power 6 hours before starting the operation. This is necessary to warm the crankcase by the electric heater.
- If operation is performed within 12 minutes after the indoor and outdoor units are turned on, the compressor will not operate before the communication is established in a correct way between outdoor unit(s) and indoor units.
- Before starting charging procedures, check if the segment display indication of the main printed circuit board (A1P) is as normal (see functions of the push button switches which are located on the main printed circuit board (A1P) on page 24). If a malfunction code is present, see 15.5. Malfunction code list on page 40.
- Make sure all connected indoor units are recognized (see 15.2. Monitoring function and field settings on page 31).
- Close the front panel before any refrigerant charge operation is executed. Without the front panel attached the unit cannot judge correctly whether it is operating properly or not.

14.3.2. Charging method

As explained during vacuum drying method, once vacuum drying is finished, additional refrigerant charging can start.

A flow chart is available which gives an overview of the possibilities and actions to be taken (see 14.3.1. Flow chart on page 28).

To speed up the process of pre-charging refrigerant for large systems, it is recommended to first charge a portion of the refrigerant before performing refrigerant charging operation of outdoor unit. This step is included in below procedure. This step can be skipped, but charging will take longer in such a case.

Follow the steps as described below.

1 Calculate the additional amount of refrigerant to be added using the formula mentioned in 14.2. Calculating the additional refrigerant charge on page 26.

2 The first 22 lbs. (10 kg) of additional refrigerant can be charged without outdoor unit operation.

If the additional refrigerant amount is smaller than 22 lbs. (10 kg), perform the pre-charging procedure as explained in step 3 and 4a below.

If the additional refrigerant charge is larger than 22 lbs. (10 kg), perform step 3 till the end of the procedure.

3 Pre-charging can be done without compressor running by connecting the refrigerant tank only to the liquid stop valve service port (open valve A). Make sure that all outdoor unit stop valves, as well as valves B and C are closed.

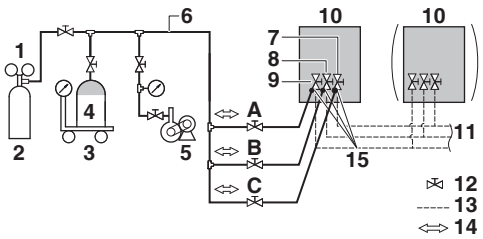

1 Gauge manifold
2 Nitrogen
3 Measuring instrument
4 Refrigerant R410A tank (siphon system)
5 Vacuum pump
6 Charge hose
7 High/low pressure gas pipe stop valve
8 Suction gas pipe stop valve
9 Liquid pipe stop valve
10 Outdoor unit
11 To Branch Selector unit (indoor unit)
12 Stop valve
13 Field piping
14 Gas flow
15 Stop valve service port
A Valve A
B Valve B
C Valve C

4 a) If the calculated additional refrigerant amount is reached by above pre-charging procedure, close valve A.
b) If the total amount of refrigerant could not be charged by pre-charging, then close valve A and go to step 5.

INFORMATION

If the total additional refrigerant amount was reached in step 4 (by pre-charging only), record the amount of refrigerant that was added on the additional refrigerant charge label provided with the unit and attach it on the back side of the front panel. Perform the test procedure as described in 15.4. Test operation on page 39.

5 After pre-charging, perform the refrigerant charge operation as shown below and charge the remaining refrigerant of the additional charging amount through valve B.
Open all outdoor units stop valves. Valves A, B and C must remain closed!

NOTE

- The refrigerant charging port is connected to the piping inside the unit. The unit's internal piping is already factory charged with refrigerant, so be careful when connecting the charge hose.
- After adding the refrigerant, do not forget to close the cover of the refrigerant charging port. The tightening torque for the cover is 8.48 to 10.3 ft•lbf (11.5 to 13.9 N•m).
- In order to ensure uniform refrigerant distribution, it may take the compressor ±10 minutes to start up after the unit has started operation. This is not a malfunction.

6 The remaining additional refrigerant charge can be charged by operating the outdoor unit by means of the refrigerant charge operation mode:
- Turn on the power of the indoor units and outdoor unit.
- Take all the precautions mentioned in **start-up and configuration** into account.
- Activate outdoor unit setting [2-20]=1 to start refrigerant charge mode. Refer to page 32 for details.
Result: The unit will start operation. Valve B can be opened. Charging of remaining additional refrigerant can be done. When the remaining calculated additional refrigerant amount is added, close valve B and push BS3 to stop the refrigerant charging procedure.

INFORMATION

The refrigerant charge operation will automatically stop within 30 minutes. If charging is not completed after 30 minutes, perform the additional refrigerant charging operation again.

Perform the test procedure as described in 15.4.2. Test operation on page 40.

INFORMATION

- When a malfunction is detected during the procedure (e.g., in case of closed stop valve), a malfunction code will be displayed. In that case, refer to 15.5. Malfunction code list on page 40 and solve the malfunction accordingly. Resetting the malfunction can be done by pushing BS3. The procedure can be restarted from 6).
- Aborting the refrigerant charge is possible by pushing BS3. The unit will stop and return to idle condition.

If any malfunction code is displayed, close valve B immediately. Confirm the malfunction code and take corresponding action, 15.5. Malfunction code list on page 40.

14.3.3. Final charge adjustment

It is not necessary to do this final adjustment normally, but perform the following operation only when if the most adequate refrigerant for the best performance is required.
The outdoor temperature must be between 60°F (16°C) and 97°F (36 °C).

Purge gauge lines. Connect service gauge manifold to the service port between the compressor and the reversing valve in each outdoor unit. Run the system for 30 minutes in cooling by the forced operation using the field setting mode [2-6] (value 0: OFF, 1:ON) (Refer to 15.2. Monitoring function and field settings.) to allow pressures to stabilize, then check subcooling as detailed in the following sections.

Subcooling = Sat. Liquid Temp. – Liquid Line Temp.

1 Temporarily install a thermometer on the liquid line between the coil and the EV in each outdoor unit. Ensure the thermometer makes adequate contact and is insulated for best possible readings. Use liquid line temperature to determine sub cooling.
2 Check subcooling for each outdoor unit and calculate the average subcooling of the outdoor unit. Systems should have a subcooling of 11±3°F (6±2°C).
   a. If average subcooling is low, add charge to raise subcooling to 11±3°F (6±2°C) (The maximum additional charge is 4.4 lbs. (2kg))
   b. If average subcooling is high, remove charge to lower the subcooling to 11±3°F (6±2°C)

14.3.4. Checks after adding refrigerant

- Are all stop valves open?
- Is the amount of refrigerant, that has been added, recorded on the refrigerant charge label?

NOTE

Make sure to open all stop valves after (pre-) charging the refrigerant. Operating with the stop valves closed will damage the compressor.

15. Start-up and configuration

INFORMATION

It is important that all information in this chapter is read sequentially by the installer and that the system is configured as applicable.

DANGER: ELECTRICAL SHOCK

See Safety considerations on page i.

15.1. Checks before initial start up

After the installation of the unit, first check the following items. Once all below checks are fulfilled, the unit must be closed, only then can the unit be powered up.

1 Installation
Check that the unit is properly installed, to avoid abnormal noises and vibrations when starting up the unit.

2 Field wiring
Be sure that the field wiring has been carried out according to the instructions described in 9. Field wiring on page 18, according to the wiring diagrams and according to the applicable legislation.

3 Power supply voltage
Check the power supply voltage on the local supply panel. The voltage must correspond to the voltage on the identification label of the unit.

4 Ground wiring
Be sure that the ground wires have been connected properly and that the ground terminals are tightened.

5 Insulation test of the main power circuit
Using a megatester for 500 V, check that the insulation resistance of 1 MΩ or more is attained by applying a voltage of 500 V DC between power terminals and ground. Never use the megatester for the transmission wiring.

6 Fuses, circuit breakers, or protection devices
Check that the fuses, circuit breakers, or the locally installed protection devices are of the size and type specified in 9. Field wiring on page 18. Be sure that neither a fuse nor a protection device has been bypassed.

7 Internal wiring
Visually check the control box and the inside of the unit on loose connections or damaged electrical components.

8 Pipe size and pipe insulation
Be sure that correct pipe sizes are installed and that the insulation work is properly executed.

9 Stop valves
Be sure that all stop valves are open.

10 Damaged equipment
Check inside of the unit on damaged components or squeezed pipes.

11 Refrigerant leak
Check inside of the unit on refrigerant leakage. If there is a refrigerant leak, try to repair the leak. If the repair is unsuccessful, call your local dealer. Do not touch any refrigerant which has leaked out from refrigerant piping connections. This may result in frostbite.

12 Oil leak
Check the compressor for oil leakage. If there is an oil leak, try to repair the leak. If the repairing is unsuccessful, call your local dealer.

13 Air inlet/outlet
Check that the air inlet and outlet of the unit is not obstructed by paper sheets, cardboard, or any other material.

14 Record the contents of field setting.
Record them on the accessory **REQUEST FOR THE INDICATION** label.
And attach the label on the back side of the front panel.

15 Record the installation date.
Record the installation date on the accessory **REQUEST FOR THE INDICATION** label.
And attach the label on the back side of the front panel.

15.2. Monitoring function and field settings

The operation of the outdoor unit can further be defined by changing some field settings. Next to making field settings it is also possible to confirm the current operation parameters of the unit.
The setting can also be performed via the PC configuration software.

Below relevant Monitoring mode (mode 1) and Field setting mode (mode 2) settings are explained in detail. How to access them, how to change the value of the settings and how to confirm them is explained in 13. Making field settings on page 24. In that chapter, an example is given on how to make a setting. It is advised to check this procedure before accessing, checking and changing below settings.

Once the default situation of the segment indication is confirmed (see 13. Making field settings on page 24), the mode 1 and mode 2 can be accessed.
Making settings is done via the master outdoor unit.

15.2.1. Mode 1

Mode 1 can be used to monitor the current situation of the outdoor unit. Some field setting contents can be monitored as well.
Below the settings in mode 1 are explained.

[1-0]= shows whether the unit you are checking is a master or sub 1 unit
- No indication=undefined situation
- 0=outdoor unit is master unit
- 1=outdoor unit is sub 1 unit

Master and sub 1 indications are relevant in multiple outdoor unit system configurations. The allocation of which outdoor unit is master and sub 1 are decided by the unit's logic.
The master unit must be used to input field settings in mode 2.

[1-1]= shows the status of low noise operation.
- 1=unit is currently operating under low noise restrictions
- 0=unit is currently not operating under low noise restrictions

Low noise operation reduces the sound generated by the unit compared to nominal operating conditions.
Low noise operation can be set in mode 2. There are two methods to activate low noise operation of the outdoor unit system.
The first method is to enable an automatic low noise operation during night time by field setting. The unit will operate at the selected low noise level during the selected time frames.
The second method is to enable low noise operation based on an external input. For this operation an optional accessory is required.

[1-2]= shows the status of power consumption limitation operation.
- 1=unit is currently operating under power consumption limitation
- 0=unit is currently not operating under power consumption limitations

Power consumption limitation reduces the power consumption of the unit compared to nominal operating conditions.
Power consumption limitation can be set in mode 2. There are two methods to activate power consumption limitation of the outdoor unit system.
The first method is to enable a forced power consumption limitation by field setting. The unit will always operate at the selected power consumption limitation.
The second method is to enable power consumption limitation based on an external input. For this operation an optional accessory is required.

[1-5]= shows the current T_e target parameter position.
Refer to 15.3. Energy saving and optimum operation on page 37 for more details about the contents of this value.

[1-6]= shows the current T_c target parameter position.
Refer to 15.3. Energy saving and optimum operation on page 37 for more details about the contents of this value.

[1-10]= shows the total number of connected indoor units.
It can be convenient to check if the total number of indoor units which are installed match the total number of indoor units which are recognized by the system. In case there is a mismatch, it is advised to check the communication wiring path between outdoor and indoor units (F1/F2 communication line).

[1-13]= shows the total number of connected outdoor units.
It can be convenient to check if the total number of outdoor units which are installed matches the total number of outdoor units which are recognized by the system. In case there is a mismatch, it is advised to check the communication wiring path between outdoor and outdoor units.

[1-17]= shows the latest malfunction code.

[1-18]= shows the 2nd last malfunction code.

[1-19]= shows the 3rd last malfunction code.
When the latest malfunction codes were reset by accident on an indoor unit user interface, they can be checked again through this monitoring settings. For the content or reason behind the malfunction code see 15.5. Malfunction code list on page 40, where most relevant malfunction codes are explained. Detailed information about malfunction codes can be consulted in the service manual of this unit.

[1-40]= shows the current cooling comfort setting. See 15.3. Energy saving and optimum operation on page 37 for more details about this setting.

[1-41]= shows the current heating comfort setting. See 15.3. Energy saving and optimum operation on page 37 for more details about this setting.

15.2.2. Mode 2

Mode 2 is used to change the field settings of the system. Consulting the current field setting value and changing the current field setting value is possible.

In general, normal operation can be resumed without special intervention after changing field settings.

Some field settings are used for special operation (e.g., 1 time operation, recovery/vacuuming setting, adding refrigerant setting, etc.). In such a case, it is required to abort the special operation before normal operation can restart. It will be indicated in below explanations.

[2-0]= Cool/Heat selection setting

Cool/Heat selection setting is used in case the optional Cool/Heat selector (KRC19-26A) is used. Depending on the outdoor unit setup (single outdoor unit setup or multi outdoor unit setup), the correct setting should be chosen. More details on how to use the Cool/Heat selector option can be found in the manual of the Cool/Heat selector.
Default value=0.

- 0=Each individual outdoor unit can select Cool/Heat operation (by Cool/Heat selector if installed).
- 1=Master unit decides Cool/Heat operation when outdoor units are connected in multiple system combination (a)
- 2=Sub unit for Cool/Heat operation when outdoor units are connected in multiple system combination (a)

Change [2-0]=0, 1 or 2 in function of required functionality.

[2-8]= T_e target temperature during cooling operation

Default value=0.

Value [2-8]	T_e target
0	Auto (default)
2	43°F (6°C)
3	45°F (7°C)
4	46°F (8°C)
5	48°F (9°C)
6	50°F (10°C)
7	52°F (11°C)

Change [2-8]=0, 2-7 in function of required operation method during cooling.
For more information and advice about the effect of these settings, see 15.3. Energy saving and optimum operation on page 37.

[2-9]= T_c target temperature during heating operation

Default value=0.

Value [2-9]	T_c target
0	Auto (default)
1	106°F (41°C)
3	109°F (43°C)
6	115°F (46°C)

Change [2-9]=0, 1, 3 or 6 in function of required operation method during heating.
For more information and advice about the effect of these settings, see 15.3. Energy saving and optimum operation on page 37.

[2-12]= Enable the low noise function and/or power consumption limitation via external control adaptor (DTA104A61/62)

If the system needs to run under low noise operation or under power consumption limitation conditions when an external signal is sent to the unit, this setting should be changed. This setting will only be effective when the optional external control adaptor (DTA104A61/62) is installed.
Default value=0.
To activate this function change [2-12]=1.

[2-18]= Fan high static pressure setting

In order to increase the static pressure the outdoor unit fan is delivering, this setting should be activated. For details about this setting, see technical specifications.
Default value=0.
To activate this function change [2-18]=1.

[2-20]= Additional refrigerant charge

In order to add the additional refrigerant charge amount following setting should be applied.
Further instructions can be found in chapter 14.3. Method for adding refrigerant on page 28.
Default value=0.
To activate this function change [2-20]=1.
To stop the additional refrigerant charge operation (when the required additional refrigerant amount is charged), push BS3. If this function was not aborted by pushing BS3, the unit will stop its operation after 30 minutes. If 30 minutes was not sufficient to add the needed refrigerant amount, the function can be reactivated by changing the field setting again.

[2-21]= Refrigerant recovery/vacuuming mode

In order to achieve a free pathway to recovering refrigerant out of the system or to remove residual substances or to vacuum the system it is necessary to apply a setting which will open required valves in the refrigerant circuit so the recovering of refrigerant or vacuuming process can be done properly.
Default value=0.
To activate function change [2-21]=1.
To stop the refrigerant recovery/vacuuming mode, push BS3. If BS3 is not pushed, the system will remain in refrigerant recovery/vacuuming mode.

[2-22]= Automatic low noise setting and level during night time

By changing this setting, you can activate the automatic low noise operation function of the unit and define the level of operation. Depending on the chosen level, the noise level will be lowered (3: Level 3<2: Level2<1: Level1).
The start and stop moments for this function are defined under setting [2-26] and [2-27].
Default value=0.
Change [2-22]=1, 2 or 3 in function of required level.

[2-25]= Low noise operation level via the external control adaptor

If the system needs to run under low noise operation conditions when an external signal is sent to the unit, this setting defines the level of low noise that will be applied (3: Level 3<2: Level 2<1: Level 1).
This setting will only be effective when the optional external control adaptor (DTA104A61/62) is installed and the setting [2-12] is activated.
Default value=2.
Change [2-25]=1, 2 or 3. in function of required level.

[2-26]= Low noise operation start time

Change [2-26]=1, 2 or 3 in function of required timing.
Default value=2.

Value [2-26]	Start time automatic low noise operation (approximately)
1	8:00 p.m.
2	10:00 p.m. (default)
3	12:00 a.m.

This setting is used in conjunction with setting [2-22].

[2-27]= Low noise operation stop time

Default value=3.

Value [2-27]	Start time automatic low noise operation (approximately)
1	6:00 a.m.
2	7:00 a.m.
3	8:00 a.m. (default)

This setting is used in conjunction with setting [2-22].

[2-30]= Power consumption limitation level (step 1) via the external control adaptor (DTA104A61/62)

If the system needs to run under power consumption limitation conditions when an external signal is sent to the unit, this setting defines the level power consumption limitation that will be applied for step 1. The level is according to the table.
Default value=3.
Change [2-30]=1, 2, 3, 4, 5, 6, 7 or 8 in function of required limitation.

Value [2-30]	Power consumption limitation (approximately)
1	60%
2	65%
3	70% (default)
4	75%
5	80%
6	85%
7	90%
8	95%

[2-31]= Power consumption limitation level (step 2) via the external control adaptor (DTA104A61/62)

If the system needs to run under power consumption limitation conditions when an external signal is sent to the unit, this setting defines the level power consumption limitation that will be applied for step 2. The level is according to the table.
Default value=1.
Change [2-31]=1, 2 or 3 in function of required limitation.

Value [2-31]	Power consumption limitation (approximately)
1	40% (default)
2	50%
3	55%

[2-32]= Forced, all time, power consumption limitation operation (no external control adaptor is required to perform power consumption limitation)

If the system always needs to run under power consumption limitation conditions, this setting activates and defines the level power consumption limitation that will be applied continuously. The level is according to the table.
Default value=0 (OFF).

Value [2-32]	Restriction reference
0	Function not active (default)
1	Follows [2-30] setting
2	Follows [2-31] setting

Change [2-32]=0, 1 or 2 in function of required limitation.

[2-34]= Indoor unit fan tap setting

Indoor units fan speed limitation related to connection capacity and outdoor air temperature for energy saving.

Default value=0.

Value [2-34]	Indoor unit fan tap setting
0	Fan speed is limited to L tap when indoor units capacity ≥130%.
1	In heating mode, fan speed is limited to L tap when indoor units capacity ≥130%.
2	Fan speed follows the setting of remote controllers (not limited by indoor units connection capacity).

See the service manual for other indoor unit fan tap settings.

[2-35]= Height difference setting

Default value=1.

In case the outdoor unit is installed in the lowest position (indoor units are installed on a higher position than outdoor units) and the height difference between the highest indoor unit and the outdoor unit exceeds 130 ft. (40 m), the setting [2-35] should be changed to 0.

Other changes/limitations to the circuit apply, for more information see 7.5. System piping (length) limitations on page 11.

[2-45]= Low ambient cooling

Default value=0.

Value [2-45]	Description
0	No low ambient cooling available. (default)
1	Low ambient cooling available.

This setting is not applicable to multi Branch Selector unit. For more information about this setting, refer to the service manual.

[2-47]= T_e target temperature during heat recovery operation

Default value=0.

Value [2-47]	T_e target
0	Auto (default)
2	43°F (6°C)
3	45°F (7°C)
4	46°F (8°C)
5	48°F (9°C)
6	50°F (10°C)
7	52°F (11°C)

Change [2-47]=0, 2-7 in function of required operation method during heat recovery operation.

For more information and advice about the effect of these settings, see 15.3. Energy saving and optimum operation.

[2-49]= Height difference setting

Default value=0.

In case the outdoor unit is installed in the highest position (indoor units are installed on a lower position than outdoor units) and the height difference between the lowest indoor unit and the outdoor unit exceeds 164 ft. (50 m), the setting [2-49] has to be changed to 1.

Other changes/limitations to the circuit apply, for more information see 7.5. System piping (length) limitations on page 11.

[2-62]= Cooling and heating capacity learning control

Default value=0.

Value [2-62]	Description
0	OFF
1	Cooling adjustment
2	Heating adjustment
3	Cooling and heating adjustment

Adjust cooling and heating system operation to achieve stable capacity.

Note: This setting may result in a longer reaction time to large load variations.

[2-81]= Cooling comfort setting

Default value=1.

Value [2-81]	Cooling comfort setting
0	Eco
1	Mild (default)
2	Quick
3	Powerful

Change [2-81]=0, 1, 2 or 3 in function of required limitation. This setting is used in conjunction with setting [2-8] and [2-47].

For more information and advice about the effect of these settings, see 15.3. Energy saving and optimum operation.

[2-82]= Heating comfort setting

Default value=1.

Value [2-82]	Heating comfort setting
0	Eco
1	Mild (default)
2	Quick
3	Powerful

Change [2-82]=0, 1, 2 or 3 in function of required limitation. This setting is used in conjunction with setting [2-9].

For more information and advice about the effect of these settings, see 15.3. Energy saving and optimum operation.

[2-92]= Te target temperature upper limit

Default value=1.

Value [2-92]	Te target temperature upper limit
0	L
1	M
2	H

If Auto Te, then use this setting to address different load profiles. If the frequent operation is at lower system load, then use a higher setting under [2-92].

Note: In high humid areas, it is recommended to keep this setting to 0 or 1.

15.2.3. Auxiliary heat control

To improve efficiency the aux heat can be lockout based on outdoor temperature.

Item	Description	Min	Max	Increments
AUX Heater Allowable Temp	Below this temperature, AUX heater can be energized based on the indoor temperature condition.	0F	65F (35F default)	5F
AUX Heater Allowable temp Release differential	When the outdoor temp recovered by this temp, AUX heater cannot be allowed.	5F, 10F (default), 15F		

[2-97]= Aux heater max allowable temp
AUX Heater is allowed to energize when the ambient temp is smaller than the AUX Heater Max Allowable Temp.

AUX Heater Max Allowable Temp	Fahrenheit	Celsius
0	0	– 17.7
1	5	– 15
2	10	– 12.2
3	15	– 9.4
4	20	– 6.6
5	25	– 3.8
6	30	– 1.1
7	35 (default)	1.6 (default)
8	40	4.4
9	45	7.2
10	50	10
11	55	12.7
12	60	15.5
13	65	18.3
14	AUX Heater always NOT allowed	
15	AUX Heater always allowed	

[2-98]= Aux heater max allowable temp release differential
AUX Heater is not allowed to energize when the outdoor ambient temp is recovered by differential (below) above the AUX Heater Max Allowable Temp.

AUX Heater Max Allowable temp Release differential	Fahrenheit	Celsius
0	5	2.8°C
1	10 (default)	5.6°C (default)
2	15	8.3°C

15.2.4. Heat pump lockout

- New control logic to provide more application options for cold climates.
- Outside temperature can now be measured directly from the outdoor unit coil sensor.
- VRV IV HR, VRV-S and VRV Cold Climate can also be programed to automatically switch to emergency heat is there is a system fault.

Item	Description	Min	Max	Increments
Heat Pump Lockout Temp	Below this temperature, heat pump is locked out.	– 15F (default)	50F	5F
Heat Pump Lockout Release differential	When the outdoor temp is recovered by this temp, heat pump is resumed.	5F, 10F (default), 15F		

[2-16]= Aux heater setting (Type I)

Value [2-16]	Aux heater
0	OFF
1	ON

[2-37]= Aux heater setting (Type II)

Value [2-37]	Controlling mode
1	Mode 1
2	Mode 2
3	Mode 3
4	Mode 4
5	Mode 5
6	Mode 6

Type		Description	Actions					
			Field setting	Shorted between	Heating Thermo-on		Heating Thermo-off	
					Aux heater	Indoor fan	Aux heater	Indoor fan
I	--	Heat-pump heating is always locked out	2-16 = ON	--	ON	ON (H/L)	OFF	LL
II	Mode 1	Lockout is controlled by ABC terminals	2-37 = Mode 1	A-C	ON	ON (H/L)	OFF	LL
				B-C				OFF
	Mode 2 (for a heater which doesn't need airflow)		2-37 = Mode 2	A-C		LL		LL
				B-C		OFF		OFF
	Mode 3	Lockout is controlled by the outdoor ambient temperature and setpoint which is configured by the field setting 2-78 and 2-79	2-37 = Mode 3	Same as 2-37 = Mode 1 & A-C shorted				
	Mode 4		2-37 = Mode 4	Same as 2-37 = Mode 1 & B-C shorted				
	Mode 5		2-37 = Mode 5	Same as 2-37 = Mode 2 & A-C shorted				
	Mode 6		2-37 = Mode 6	Same as 2-37 = Mode 2 & B-C shorted				

[2-78]= Heat pump lockout temp

Heat pump would be locked out when the outdoor ambient temp is smaller than the Heat Pump Lockout Temp below – this setting is only affective when heat pump lockout mode has been set. Unit will switch to heat pump lock out.

Heat Pump Lockout Temp	Fahrenheit	Celsius
0	– 15 (default)	– 26.1 (default)
1	– 10	– 23.3
2	– 5	– 20.5
3	0	– 17.7
4	5	– 15
5	10	– 12.2
6	15	– 9.4
7	20	– 6.6
8	25	– 3.8
9	30	– 1.1
10	35	1.6
11	40	4.4
12	45	7.2
13	50	10
14	Forced Heat pump Lock out	

[2-79]= Heat pump lockout release differential

Heat pump would be resumed when the outdoor ambient temp is recovered by differential (below) above the Heat Pump Lockout Temp.

Heat Pump Lockout Release differential	Fahrenheit	Celsius
0	5	2.8°C
1	10 (default)	5.6°C (default)
2	15	8.3°C

When HP lockout mode has been set the auto backup function will automatically be set. This will allow the auxiliary or secondary heat source to be automatically energized in the event of a system failure.

Error codes capable of auto backup are listed in the table below. Please be aware that the error codes that are not listed do not auto backup in order to protect the unit.

Error contents	Error code (Auto backup possible)
BS abnormality	A3
Actuation of high pressure switch	E3
Actuation of low pressure sensor	E4
Inv. compressor motor lock	E5
Compressor damage alarm	E6
Outdoor unit fan motor abnormality	E7
Electronic expansion valve coil abnormality	E9
Position signal abnormality of outdoor unit fan motor	H3
	H7
Outdoor air thermistor (R1T) abnormality	H9
Discharge pipe temperature abnormality	F3
Wet alarm	F4
BS electronic expansion valve abnormality	F9
Discharge pipe thermistor (R21T, R22T) and compressor surface temperature thermistor (R14T) abnormality	J3
Accumulator inlet thermistor (R10T) abnormality	J5
Heat exchanging deicer thermistor (R11T) and heat exchanger gas pipe thermistor (R8T,R9T) abnormality	J6
Receiver inlet thermistor (R3T) and sub cooling heat exchanger liquid pipe thermistor (R7T) abnormality	J7
Heat exchanger liquid pipe thermistor (R15T, R4T, R5T) abnormality	J8
Subcooling heat exchanger gas pipe thermistor (R6T) and receiver gas purge thermistor (R13T) abnormality	J9
High pressure sensor abnormality	JA
Low pressure sensor abnormality	JC
Inverter PCB abnormality	L1
Reactor temperature rise abnormality	L3
Inverter radiation fin temperature rise abnormality	L4
Inv. compressor instantaneous overcurrent	L5
Inv. compressor overcurrent	L8
Inv. compressor startup abnormality	L9
Transmission error between inverter and control PCB	LC

15.3. Energy saving and optimum operation

REYQ-X units are equipped with advanced energy saving functionality. Depending on the priority, emphasizes can be put on energy saving or comfort level. Several parameters can be selected, resulting in the optimal balance between energy consumption and comfort for the particular application.

Several patterns are available and explained below. Modify the parameters to the needs of your building and to realize the best balance between energy consumption and comfort.

15.3.1. Three main operation methods are available:

- **Basic**
  The refrigerant temperature is fixed independent from the situation. It corresponds to the standard operation which is known and can be expected from/under previous VRV systems:
  - To activate this operation method under cooling operation: change field setting [2-8]=2 and [2-47]=2.
  - To activate this operation method under heating operation: change field setting [2-9]=6.

- **Automatic**
  The refrigerant temperature is set depending on the outdoor ambient conditions. As such adjusting the refrigerant temperature to match the required load (which is also related to the outdoor ambient conditions).
  E.g., when your system is operating in cooling, you do not need as much cooling under low outdoor ambient temperatures (e.g., 77°F (25°C)) as under high outdoor ambient temperatures (e.g., 95°F (35°C)).
  Using this idea, the system automatically starts increasing its refrigerant temperature, automatically reducing the delivered capacity and increasing the system's efficiency.
  - To activate this operation method under cooling operation: change field setting [2-8]=0 (default) and [2-47]=0 (default).

  E.g., when your system is operating in heating, you do not need as much heating under high outdoor ambient temperatures (e.g., 59°F (15°C)) as under low outdoor ambient temperatures (e.g., 23°F (–5°C)).
  Using this idea, the system automatically starts decreasing its refrigerant temperature, automatically reducing the delivered capacity and increasing the system's efficiency.
  - To activate this operation method under heating operation: change field setting [2-9]=0 (default).

- **Hi-sensible/economic (cooling/heating)**
  The refrigerant temperature is set higher/lower (cooling/heating) compared to basic operation. The focus under high sensible mode is comfort feeling for the customer.
  The selection method of indoor units is important and has to be considered as the available capacity is not the same as under basic operation. For details concerning to Hi-sensible applications, please contact your dealer.
  - To activate this setting under cooling operation: change field setting [2-8] and [2-47] to the appropriate value, matching the requirements of the pre-designed system containing a high sensible solution.

Value [2-8] and [2-47]	T_e target
3	45°F (7°C)
4	46°F (8°C)
5	48°F (9°C)
6	50°F (10°C)
7	52°F (11°C)

  - To activate this setting under heating operation: change field setting [2-9] to the appropriate value, matching the requirements of the pre-designed system containing a high sensible solution.

Value [2-9]	T_c target
1	106°F (41°C)
3	109°F (43°C)

15.3.2. Several comfort settings are available

For each of above modes a comfort level can be selected. The comfort level is related to the timing and the effort (energy consumption) which is put in achieving a certain room temperature by temporarily changing the refrigerant temperature to different values in order to achieve requested conditions more quickly.

- **Powerful**
  Overshoot (during heating operation) or undershoot (during cooling operation) is allowed compared to the requested refrigerant temperature, in order to achieve the required room temperature very fast. The overshoot is allowed from the start up moment.
  In case of cooling operation the evaporating temperature is allowed to go down to 37°F (3°C) on temporary base depending on the situation.
  In case of heating operation the condense temperature is allowed to go up to 120°F (49°C) on temporary base depending on the situation.
  When the request from the indoor units becomes more moderate, the system will eventually go to the steady state condition which is defined by the operation method above.
  - To activate the powerful comfort setting under cooling operation, change field setting [2-81]=3.

  This setting is used in conjunction with setting [2-8] and [2-47].
  - To activate the powerful comfort setting under heating operation, change field setting [2-82]=3.

  This setting is used in conjunction with setting [2-9].

- **Quick**
  Overshoot (during heating operation) or undershoot (during cooling operation) is allowed compared to the requested refrigerant temperature, in order to achieve the required room temperature very fast. The overshoot is allowed from the start up moment.

In case of cooling operation the evaporating temperature is allowed to go down to 43°F (6°C) on temporary base depending on the situation.
In case of heating operation the condense temperature is allowed to go up to 115°F (46°C) on temporary base depending on the situation.
When the request from the indoor units becomes more moderate, the system will eventually go to the steady state condition which is defined by the operation method above.

- To activate the quick comfort setting under cooling operation, change field setting [2-81]=2.

This setting is used in conjunction with setting [2-8] and [2-47].

- To activate the quick comfort setting under heating operation, change field setting [2-82]=2.

This setting is used in conjunction with setting [2-9].

- **Mild**

Overshoot (during heating operation) or undershoot (during cooling operation) is allowed compared to the requested refrigerant temperature, in order to achieve the required room temperature very fast. The overshoot is not allowed from the start up moment. The start up occurs under the condition which is defined by the operation mode above.
In case of cooling operation the evaporating temperature is allowed to go down to 43°F (6°C) on temporary base depending on the situation.
In case of heating operation the condense temperature is allowed to go up to 115°F (46°C) on temporary base depending on the situation.
When the request from the indoor units becomes more moderate, the system will eventually go to the steady state condition which is defined by the operation method above.
The start up condition is different from the powerful and quick comfort setting.

- To activate the mild comfort setting under cooling operation, change field setting [2-81]=1.

This setting is used in conjunction with setting [2-8] and [2-47].

- To activate the mild comfort setting under heating operation, change field setting [2-82]=1.

This setting is used in conjunction with setting [2-9].

- **Eco**

The original refrigerant temperature target, which is defined by the operation method (see above) is kept without any correction, unless for protection control.

- To activate the mild comfort setting under cooling operation, change field setting [2-81]=0.

This setting is used in conjunction with setting [2-8] and [2-47].

- To activate the mild comfort setting under heating operation, change field setting [2-82]=0.

This setting is used in conjunction with setting [2-9].

Example: Automatic mode during cooling

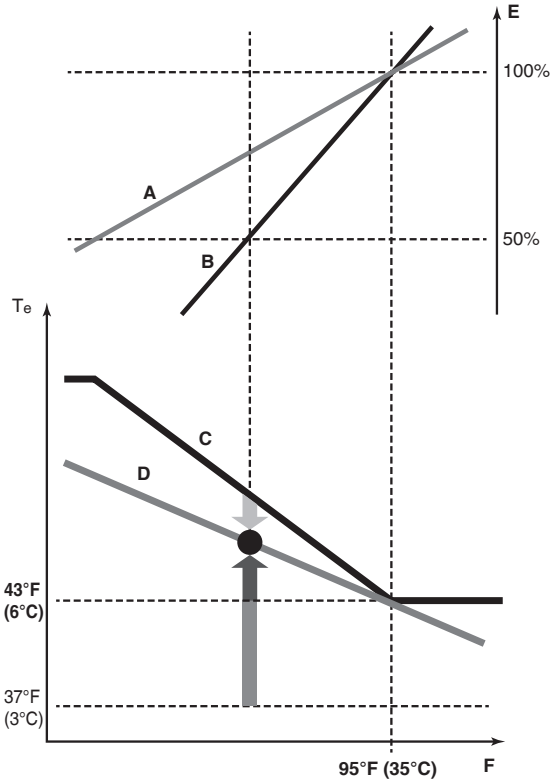

A Actual load curve
B Virtual load curve (initial capacity automatic mode)
C Virtual target value (initial evaporation temperature value automatic mode)
D Required evaporation temperature value
E Load factor
F Outside air temperature
Te Evaporating temperature
Quick
Powerful
Mild

Room temperature evolution:

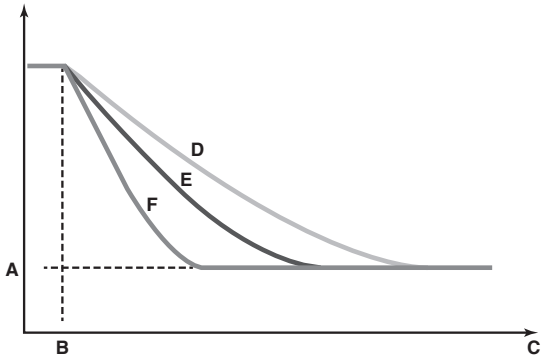

A Indoor unit set temperature
B Operation start
C Operating time
D Mild
E Quick
F Powerful

Example: Automatic mode during cooling

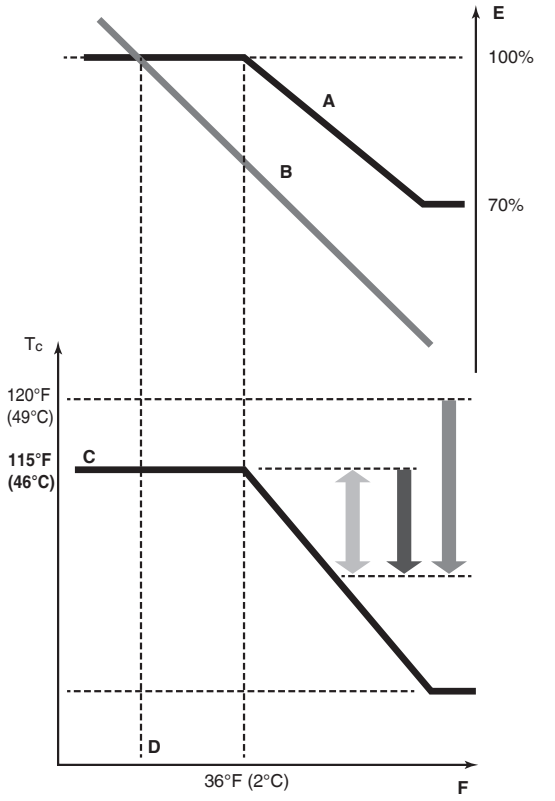

A Virtual load curve (default automatic mode peak capacity)
B Load curve
C Virtual target value (initial condensation temperature value automatic mode)
D Design temperature
E Load factor
F Outside air temperature
Tc Condensing temperature
Quick
Powerful
Mild

Room temperature evolution:

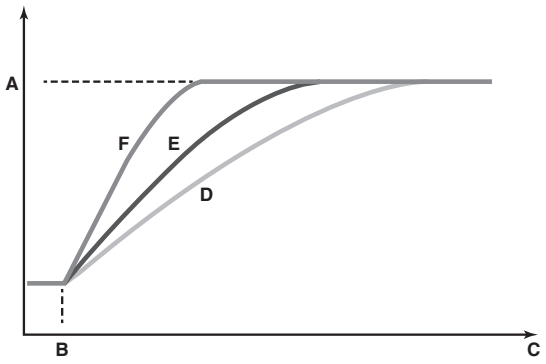

A Indoor unit set temperature
B Operation start
C Operating time
D Mild
E Quick
F Powerful

No matter which control is selected, variations on the behavior of the system are still possible due to protection controls to keep the unit operating under reliable conditions. The intentional target, however, is fixed and will be used to obtain the best balance between energy consumption and comfort, depending on the application type.

15.4. Test operation

After installation and once the field settings are defined, the installer is obliged to verify correct operation. Therefore a test run must be performed according to the procedures described below.

15.4.1. Precautions before starting test operation

During test operation, the outdoor units, the Branch Selector units and the indoor units will start up:

- Make sure that the preparations of all Branch Selector units and all indoor units are finished (field piping, electrical wiring, air purge, etc.). See installation manual of the Branch Selector units and the indoor units for details.

⚠ CAUTION

Do not insert fingers, rods or other objects into the air inlet or outlet. When the fan is rotating at high speed, it will cause injury.

⚠ CAUTION

Do not perform the test operation while working on the Branch Selector units and the indoor units.
When performing the test operation, not only the outdoor units, but the connected indoor units will operate as well.
Working on indoor units or Branch Selector units while performing a test operation is dangerous.

⚠ CAUTION

- During tests never pressurize the appliances with a pressure higher than the maximum allowable pressure (as indicated on the nameplate of the unit).
- If refrigerant gas leaks, ventilate the area immediately. Toxic gas may be produced if refrigerant gas comes into contact with fire.
- Never directly touch any accidental leaking refrigerant. This could result in severe wounds caused by frostbite.
- Test run is possible for ambient temperatures between -4°F and 95°F (-20°C and 35°C).

⚠ DANGER: DO NOT TOUCH PIPING AND INTERNAL PARTS

See Safety considerations on page i.

⚠ DANGER:ELECTRICAL SHOCK

See Safety considerations on page i.

- Provide a logbook and machine card.
  In accordance with the applicable legislation, it may be necessary to provide a logbook with the equipment containing at least: information on maintenance, repair work, results of tests, stand-by periods, etc.

INFORMATION

Note that during the first running period of the unit, required power input may be higher. This phenomenon originates from the compressor that requires a 50 hour run elapse before reaching smooth operation and stable power consumption. Reason is that the scroll is made out of iron and that it takes some time to smooth the surfaces that make contact.

NOTE

To protect the compressor, be sure to turn on the power supply 6 hours before starting operation.

15.4.2. Test operation

The procedure below describes the test operation of the complete system. This operation checks and judges following items:

- Check of wrong wiring (communication check with indoor units).
- Check of the stop valves opening.
- Judgment of piping length.

On top of this system test operation, Branch Selector units and indoor units operation should also be checked separately.

- Make sure to carry out the system test operation after the first installation. Otherwise, the malfunction code U3 will be displayed on the user interface and normal operation or individual Branch Selector unit and indoor unit test run cannot be carried out.
- Abnormalities on Branch Selector units and indoor units cannot be checked for each unit separately. After the test operation is finished, check the Branch Selector units and the indoor units one by one by performing a normal operation using the user interface. Refer to the Branch Selector units and the indoor units installation manual for more details concerning the individual test run.

INFORMATION

- It may take 10 minutes to achieve a uniform refrigerant state before the compressor starts.
- During the test operation, the refrigerant running sound or the magnetic sound of a solenoid valve may become loud and the display indication may change.
  These are not malfunctions.

Procedure

1 Close all front panels in order to not let it be the cause of misjudgment.

2 Make sure all field settings you want are set; see 15.2. Monitoring function and field settings on page 31.

3 Turn ON the power to the outdoor units, the connected Branch Selector units and the connected indoor units.

NOTE

Be sure to turn on the power 6 hours before operation in order to have power running to the crankcase heater and to protect the compressor.

4 Make sure the default (idle) situation is existing; see 13.2. Operating the push buttons and DIP switches on the printed circuit board on page 24. Push BS2 for 5 seconds or more. The unit will start test operation.

- The test operation is automatically carried out, the outdoor unit display will indicate t01 and the indication **Test operation** and **Under centralized control** will display on the user interface of indoor units.
  Steps during the automatic system test run procedure:
  - t01: control before start up (pressure equalization)
  - t02: cooling start up control
  - t03: cooling stable condition
  - t04: communication check
  - t05: stop valve check
  - t06: pipe length check
  - t07: refrigerant amount check
  - t08: detailed refrigerant situation check
  - t09: pump down operation
  - t 10: unit stop
- During the test operation, it is not possible to stop the unit operation from a user interface. To abort the operation, press BS3. The unit will stop after ±30 seconds.

5 Check the test operation results on the outdoor unit segment display.
  - Normal completion: no indication on the segment display (idle).
  - Abnormal completion: indication of malfunction code on the segment display.
    Refer to 15.4.3. Correcting after abnormal completion of the test operation to take actions for correcting the abnormality.
    When the test operation is fully completed, normal operation will be possible after 5 minutes.

15.4.3. Correcting after abnormal completion of the test operation

The test operation is only completed if there is no malfunction code displayed on the user interface or outdoor unit segment display. In case a malfunction code is displayed, perform correcting actions as explained in the malfunction code table. Carry out the test operation again and confirm that the abnormality is properly corrected.

INFORMATION

Refer to the installation manual of the indoor unit for other detailed malfunction codes related to indoor units.

15.5. Malfunction code list

In case of a displayed malfunction code, perform correcting actions as explained in the malfunction code table.

After correcting the abnormality, press BS3 to reset the malfunction code and retry operation.

The malfunction code which is displayed on the outdoor unit will indicate a main malfunction code and a sub code. The sub code indicates more detailed information about the malfunction code. The malfunction code will be displayed intermittent.

Example:

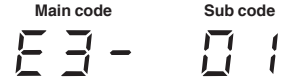

With an interval of 1 second, the display will switch between main code and sub code.

Malfunction code		Contents	Solution
Main code	Sub code Master/sub 1		
E3	01/03	• High pressure switch is activated. (S1PH)-A1P (X2A) • High pressure switch connectors are detached. -A1P (X2A, X3A, X4A)	• Check stop valves situation or abnormalities in (field) piping or airflow over air cooled coil. • Securely connect each connector. Refer to the wiring diagram attached to the back of the control box cover.
	02/04	• Stop valves are closed. • Refrigerant overcharge.	• Open stop valves. • Check refrigerant amount and recharge.
	13/14	Liquid pipe stop valve is closed.	Open liquid pipe stop valve.
	18	• Stop valves are closed. • Refrigerant overcharge.	• Open stop valves. • Check refrigerant amount and recharge.
E4	01/02	Low pressure malfunction: • Stop valves are closed. • Refrigerant shortage. • Reverse connection of high/low pressure gas pipe and suction gas pipe of Branch Selector unit.	• Open stop valves. • Check refrigerant amount and recharge.
E9	01/05	Electronic expansion valve malfunction (Y1E)-A1P (X21A)	Check connection on printed circuit board or actuator.
	03/06	Electronic expansion valve malfunction (Y2E)-A1P (X22A)	Check connection on printed circuit board or actuator.
	04/07	Electronic expansion valve malfunction (Y3E)-A1P (X23A)	Check connection on printed circuit board or actuator.
	26/27	Electronic expansion valve malfunction (Y4E)-A1P (X25A)	Check connection on printed circuit board or actuator.
	29/34	Electronic expansion valve malfunction (Y5E)-A7P (X8A)	Check connection on printed circuit board or actuator.
	31/36	Electronic expansion valve malfunction (Y6E)-A7P (X10A)	Check connection on printed circuit board or actuator.
	32/37	Electronic expansion valve malfunction (Y7E)-A7P (X11A)	Check connection on printed circuit board or actuator.
F3	01/03	Discharge temperature too high (R2T/R21T/R22T): • Stop valves are closed. • Reverse connection of high/low pressure gas pipe and suction gas pipe of Branch Selector unit. • Refrigerant shortage.	• Open stop valves. • Check refrigerant amount and recharge. • Check connection of high/low pressure gas pipe and suction gas pipe.
	20/21	Compressor casing temperature too high (R14T): • Stop valves are closed. • Refrigerant shortage.	• Open stop valves. • Check refrigerant amount and recharge.
F6	02	• Stop valves are closed. • Refrigerant overcharge.	• Open stop valves. • Check refrigerant amount and recharge.
F9	01	Electronic expansion valve malfunction (Branch Selector units).	Check connection on printed circuit board or actuator.
	02		
	05		
H9	01/02	Temperature sensor malfunction (R1T)-A1P (X18A)	Check connection on printed circuit board or actuator.
J3	16/22 17/23	Temperature sensor malfunction (R21T)-A1P (X19A)	Check connection on printed circuit board or actuator.
	18/24	Temperature sensor malfunction (R22T)-A1P (X19A)	Check connection on printed circuit board or actuator.
	19/25	Temperature sensor malfunction (R22T)-A1P (X19A)	Check connection on printed circuit board or actuator.
	47/49 48/50	Temperature sensor malfunction (R14T)-A1P (X19A)	Check connection on printed circuit board or actuator.
J5	01/03	Temperature sensor malfunction (R12T)-A7P (X15A)	Check connection on printed circuit board or actuator.
	18/19	Temperature sensor malfunction (R10T)-A1P (X29A)	Check connection on printed circuit board or actuator.

Malfunction code		Contents	Solution
Main code	Sub code Master/sub 1		
U6	01/02	Temperature sensor malfunction (R11T)-A7P (X15A)	Check connection on printed circuit board or actuator.
	08/09	Temperature sensor malfunction (R8T)-A1P (X29A)	Check connection on printed circuit board or actuator.
	11/12	Temperature sensor malfunction (R9T)-A1P (X29A)	Check connection on printed circuit board or actuator.
U7	01/02	Temperature sensor malfunction (R3T)-A1P (X30A)	Check connection on printed circuit board or actuator.
	06/07	Temperature sensor malfunction (R7T)-A1P (X30A)	Check connection on printed circuit board or actuator.
U8	01/02	Temperature sensor malfunction (R4T)-A1P (X30A)	Check connection on printed circuit board or actuator.
	08/09	Temperature sensor malfunction (R5T)-A1P (X30A)	Check connection on printed circuit board or actuator.
	11/12	Temperature sensor malfunction (R15T)-A7P (X15A)	Check connection on printed circuit board or actuator.
U9	01/02	Temperature sensor malfunction (R6T)-A1P (X30A)	Check connection on printed circuit board or actuator.
	11/12	Temperature sensor malfunction (R13T)-A7P (X17A)	Check connection on printed circuit board or actuator.
UA	06/08	High pressure sensor malfunction: open circuit (S1NPH)-A1P (X32A)	Check connection on printed circuit board or actuator.
	07/09	High pressure sensor malfunction: short circuit (S1NPH)-A1P (X32A)	Check connection on printed circuit board or actuator.
UE	06/08	Low pressure sensor malfunction: open circuit (S1NPL)-A1P (X31A)	Check connection on printed circuit board or actuator.
	07/09	Low pressure sensor malfunction: short circuit (S1NPL)-A1P (X31A)	Check connection on printed circuit board or actuator.
UC	14/15	Transmission trouble. A4P (X6A)-A1P (X25A)	Check connection.
	19/20	Transmission trouble. A5P (X3A)-A4P (X41A)	Check connection.
	24/25	Transmission trouble. A5P (X4A)-A6P (X3A)	Check connection.
	33/34	Transmission trouble. A7P (X2A)-A1P (X20A)	Check connection.
P1	01/02	Unbalanced power supply voltage.	Check if power supply is within the range.
U2	01/08	Voltage power shortage or open power supply phase.	• Check if power supply is within the range. • Correct phase order.
	02/09	Reversed or open power supply phase.	• Check if power supply is within the range. • Correct phase order.
U3	03	System test run not yet executed (system operation not possible).	Execute system test run.
	04	An error occurred during the test run.	Check the piping and re-execute the test run.
	05	Test run aborted.	Re-execute the test run.
	06		
	07	Test run aborted due to communication issues.	Check the communication wires and re-execute the test run.
	08		
U4	01	Faulty wiring to Q1/Q2 or indoor- outdoor.	Connect transmission wiring of Branch Selector units and indoor units to “TO IN/D UNIT (F1, F2)” and transmission wiring of other outdoor units to “TO OUT/D UNIT (F1, F2)”.
	03	Malfunction of connected indoor unit.	Check the malfunction code of indoor unit and resolve it.

Malfunction code		Contents	Solution
Main code	Sub code Master/sub 1		
U7	01	Faulty wiring to Q1/Q2 or indoor- outdoor.	Connect transmission wiring of Branch Selector units and indoor units to “TO IN/D UNIT (F1, F2)” and transmission wiring of other outdoor units to “TO OUT/D UNIT (F1, F2)”.
	02		
	11	• Too many indoor units are connected to F1/F2 line. • Faulty wiring between units.	• Check indoor unit amount and total capacity connected. • Check connection.
U9	01	• System mismatch. Wrong type of indoor units combined (R407C, Mini-split, etc). • Indoor unit malfunction.	Check if other indoor units have malfunction and confirm indoor unit mix is allowed.
UA	03	Connection malfunction over indoor units or type mismatch (R407C, Mini-split, etc).	Check if other indoor units have malfunction and confirm indoor unit mix is allowed.
	18		
	20	Wrong combination (different series (e.g. RXYQ and REYQ), or different type (e.g. T type and X type)).	Correct the units combination.
	27	Assembly defect of indoor, Branch Selector and outdoor units (e.g. different models, number of units or part numbers, or different series are mixed).	• Check and modify the number of indoor units that are connected. • Check the type of refrigerant for indoor and outdoor units, and replace them with adaptable indoor/outdoor units in the case of inconsistency.
	28	Different type of Branch Selector units are combined in the system. Combination of T type (BSQ-TVJ, BS-Q54TVJ) and P type (BSVQ-PVJU, BSV-Q36PVJU) cause error.	Configure the system with only T type Branch Selector units.
	31	Wrong combination of outdoor units.	Correct the units combination.
	49		
	53	• Defect of Branch Selector units connecting position or abnormality due to wiring error. • Abnormality of Branch Selector units DIP switches settings.	• Check that the wiring connection are correct, referring to the wiring diagram for Branch Selector units, and correct if there are any errors. • Check that the DIP switches settings are correct, referring to the installation manual enclosed in Branch Selector units package, or to the “Service precautions” plate attached to the control box cover, and correct if there are any errors.
UH	01	Auto address malfunction (inconsistency)	Check if transmission wired unit amount matches with powered unit amount (by monitor mode) or wait till initialization is finished.
UF	01	Auto address malfunction (inconsistency)	Check if transmission wired unit amount matches with powered unit amount (by monitor mode) or wait till initialization is finished.
	05	Stop valves closed.	Open stop valves.

16. Operation of the unit

Once the units are installed and test operation of outdoor units, Branch Selector units and indoor units are finished, the operation of the system can start.

For operating the indoor units, the user interface of the indoor units should be switched ON. Refer to the indoor unit operation manual for more details.

17. Maintenance and service

17.1. Maintenance introduction

In order to ensure optimal operation of the unit, a number of checks and inspections should be carried out on the unit at regular intervals, preferably yearly.

This maintenance shall be carried out by the installer or service agent.

17.2. Service precautions

— ⚠ DANGER: DO NOT TOUCH PIPING AND INTERNAL PARTS —

See Safety considerations on page i.

— ⚠ CAUTION —

When performing service to inverter equipment:

1 Do not open the control box cover for 10 minutes after the power supply is turned off.

2 Measure the voltage between terminals on the terminal block for power supply with a tester and confirm that the power supply is turned off. In addition, measure points as shown in the figure below, with a tester and confirm that the voltage of the capacitor in the main circuit is less than 50 V DC.

REYQ72-120XATJU type

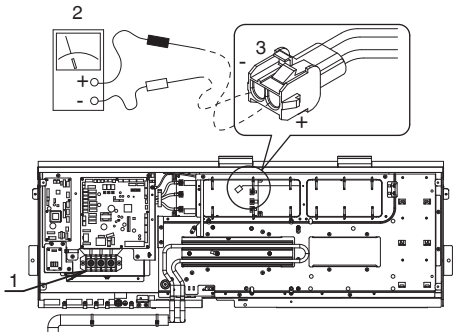

1 Terminal block for power supply
2 Tester
3 White connector

REYQ144,168XATJU type

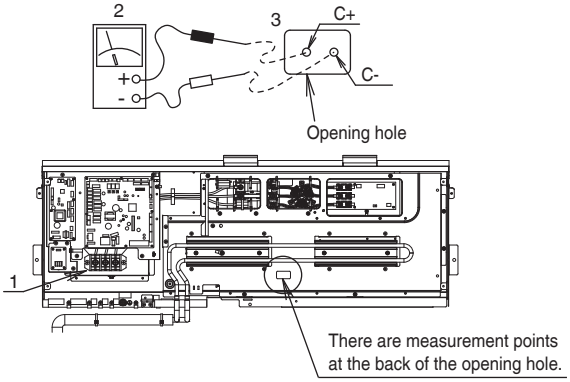

1 Terminal block for power supply
2 Tester
3 Opening hole

REYQ72-120XAYDU type

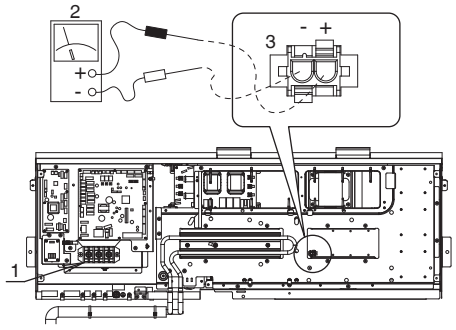

1 Terminal block for power supply
2 Tester
3 White connector

REYQ144,168XAYDU type

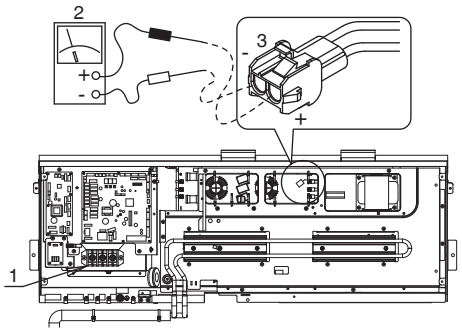

1 Terminal block for power supply
2 Tester
3 White connector

REYQ72-168XAYCU type

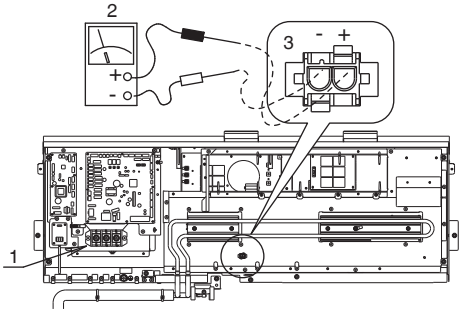

1 Terminal block for power supply
2 Tester
3 White connector

3 To prevent damaging the printed circuit board, touch a noncoated metal part to eliminate static electricity before pulling out or plugging in connectors.

4 Pull out junction connectors X1A, X2A (X3A, X4A) for the fan motors in the outdoor unit before starting service operation on the inverter equipment. Be careful not to touch the live parts.
(If a fan rotates due to strong wind, it may store electricity in the capacitor or in the main circuit and cause electric shock.)

5 After the service is finished, plug the junction connector back in. Otherwise the malfunction code E7 will be displayed on the user interface or on the outdoor unit segment display and normal operation will not be performed.

For details refer to the wiring diagram labelled on the back of the control box cover.

Pay attention to the fan. It is dangerous to inspect the unit while the fan is running. Make sure to turn off the main switch and to remove the fuses from the control circuit located in the outdoor unit.

⚠ NOTE

Play it safe. For protection of the printed circuit board, touch the control box casing by hand in order to eliminate static electricity from your body before performing service.

17.3. Service mode operation

Refrigerant recovery operation/vacuuming operation is possible by applying setting [2-21]. Refer to 13.2. Operating the push buttons and DIP switches on the printed circuit board on page 24 for details how to set mode 2.
When vacuuming/recovery mode is used, check very carefully what should be vacuumed/recovered before starting. See installation manual of the indoor unit for more information about vacuuming and recovery.

17.3.1. Vacuuming method

1 When the unit is at standstill, set the unit in [2-21]=1.
2 When confirmed, the indoor units, the Branch Selector units and outdoor unit expansion valves will fully open. At that moment the segment display indication= $t01$ and the user interface of all indoor units indicate "Test Operation" and CENTRAL CONTROL and the operation will be prohibited.
3 Evacuate the system with a vacuum pump.
4 Press BS3 to stop vacuuming mode.

17.3.2. Refrigerant recovery operation method

This should be done by a refrigerant recovery equipment. Follow the same procedure as for vacuuming method.

18. Caution for refrigerant leaks

18.1. Introduction

The installer and system specialist shall secure safety against leakage according to local regulations or standards. The following standards may be applicable if local regulations are not available.
The VRV System, like other air conditioning systems, uses R410A as refrigerant. R410A itself is an entirely safe non-toxic, non-combustible refrigerant. Nevertheless care must be taken to ensure that air conditioning facilities are installed in a room that is sufficiently large. This assures that the maximum concentration level of refrigerant gas is not exceeded, in the unlikely event of major leak in the system and this in accordance to the local applicable regulations and standards.

Maximum concentration level
The maximum charge of refrigerant and the calculation of the maximum concentration of refrigerant is directly related to the humanly occupied space in to which it could leak.
The unit of measurement of the concentration is lbs./ft.^{3} (kg/m^3) (the weight in lbs. (kg) of the refrigerant gas in 1 ft.^{3} (1 m^3) volume of the occupied space).
Compliance to the local applicable regulations and standards for the maximum allowable concentration level is required.

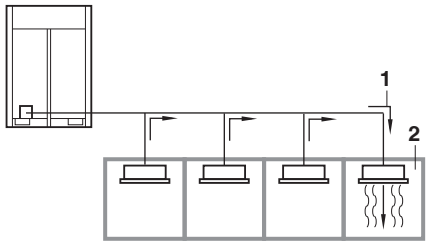

1 Direction of the refrigerant flow.
2 Room where refrigerant leak has occurred (outflow of all the refrigerant from the system).

Pay special attention to places, such as basements etc., where refrigerant could stay, since refrigerant is heavier than air.

Procedure for checking maximum concentration

Check the maximum concentration level in accordance with steps 1 to 2 below and take whatever action necessary to comply.

1 Calculate the amount of refrigerant (lbs. (kg)) charged to each system separately.

Amount of refrigerant in a single unit system (amount of refrigerant with which the system is charged before leaving the factory)	+	Additional charging amount (amount of refrigerant added locally in accordance with the length or diameter of the refrigerant piping)	=	Total amount of refrigerant (lbs. (kg)) in the system

NOTE
Where a single refrigerant facility is divided into 2 entirely independent refrigerant systems then use the amount of refrigerant with which each separate system is charged.

2 Follow local code requirements.

19. Disposal requirements

Dismantling of the unit, treatment of the refrigerant, of oil and of other parts must be done in accordance with relevant local and national legislation.

DAIKIN MANUFACTURING COMPANY, L.P.
5151 San Felipe St., Suite 500, Houston, TX 77056
www.daikincomfort.com

3P477778-7G EM18A015 [1901] HT