Installation manual

VRV W T-Series water-cooled system air conditioner

RWEQ96TAYCU
RWEQ120TAYCU
RWEQ144TAYCU
RWEQ192TAYCU
RWEQ216TAYCU
RWEQ240TAYCU
RWEQ264TAYCU
RWEQ288TAYCU
RWEQ312TAYCU
RWEQ336TAYCU
RWEQ360TAYCU
RWEQ384TAYCU
RWEQ408TAYCU
RWEQ432TAYCU

Read these instructions carefully before installation.
Keep this manual in a handy place for future reference.
This manual should be left with the equipment owner.

Installation manual VRV W T-Series water-cooled system air conditioner	**English**
Manuel d'installation Climatiseur système refroidi par eau VRV W série T	**Français**
Manual de instalación Sistema de climatización condensado por agua VRV W serie T	**Español**

Table of contents

1 Safety considerations

Read these Safety considerations for Installation carefully before installing an air conditioner or heat pump. After completing the installation, make sure that the unit operates properly during the startup operation.
Instruct the customer on how to operate and maintain the unit.
Inform customers that they should store this Installation Manual with the Operation Manual for future reference.
Always use a licensed installer or contractor to install this product.
Improper installation can result in water or refrigerant leakage, electrical shock, fire, or explosion.
Meanings of **DANGER**, **WARNING**, **CAUTION**, and **NOTE**
Symbols:

DANGER . . . . . Indicates an imminently hazardous situation which, if not avoided, will result in death or serious injury.

WARNING . . . . . Indicates a potentially hazardous situation which, if not avoided, could result in death or serious injury.

CAUTION . . . . . Indicates a potentially hazardous situation which, if not avoided, may result in minor or moderate injury. It may also be used to alert against unsafe practices.

NOTE . . . . . Indicates situations that may result in equipment or property-damage accidents only.

INFORMATION . . . This symbol identifies useful tips or additional information.

DANGER

- Refrigerant gas is heavier than air and replaces oxygen. A massive leak will result in oxygen depletion, especially in basements, and an asphyxiation hazard will result in serious injury or death.
- Do not ground units to water pipes, gas pipes, telephone wires, or lightning rods as incomplete grounding will result a severe shock hazard resulting in severe injury or death. Additionally, grounding to gas pipes will result a gas leak and potential explosion resulting in severe injury or death.
- If refrigerant gas leaks during installation, ventilate the area immediately. Refrigerant gas will result in producing toxic gas if it comes into contact with fire. Exposure to this gas will result in severe injury or death.
- After completing the installation work, check that the refrigerant gas does not leak throughout the system.
- Do not install unit in an area where flammable materials are present due to risk of explosions that will result in serious injury or death.
- Safely dispose all packing and transportation materials in accordance with federal/state/local laws or ordinances. Packing materials such as nails and other metal or wood parts, including plastic packing materials used for transportation will result in injuries or death by suffocation.

WARNING

- Only qualified personnel must carry out the installation work. Installation must be done in accordance with this installation manual. Improper installation could result in water leakage, electric shock, or fire.
- When installing the unit in a small room, take measures to keep the refrigerant concentration from exceeding allowable safety limits. Excessive refrigerant leaks, in the event of an accident in a closed ambient space, could result in oxygen deficiency.
- Use only specified accessories and parts for installation work. Failure to use specified parts could result in water leakage, electric shocks, fire, or the unit falling.
- Install the air conditioner or heat pump on a foundation strong enough that it can withstand the weight of the unit. A foundation of insufficient strength could result in the unit falling and causing injuries.
- Take into account strong winds, typhoons, or earthquakes when installing. Improper installation could result in the unit falling and causing accidents.
- Make sure that a separate power supply circuit is provided for this unit and that all electrical work is carried out by qualified personnel according to local, state and national regulations. An insufficient power supply capacity or improper electrical construction could result in electric shocks or fire.
- Make sure that all wiring is secured, that specified wires are used, and that no external forces act on the terminal connections or wires. Improper connections or installation could result in fire.
- When wiring, position the wires so that the control box cover can be securely fastened. Improper positioning of the control box cover could result in electric shocks, fire, or the terminals overheating.
- Before touching electrical parts, turn off the unit.
- This equipment can be installed with a Ground-Fault Circuit Interrupter (GFCI). Although this is a recognized measure for additional protection, with the grounding system in North America, a dedicated GFCI is not necessary.
- Securely fasten the unit terminal cover (panel). If the terminal cover/panel is not installed properly, dust or water may enter the outside unit and could result in fire or electric shock.
- When installing or relocating the system, keep the refrigerant circuit free from substances other than the specified refrigerant (R410A) such as air. Any presence of air or other foreign substance in the refrigerant circuit could result in abnormal pressure rise or rupture, resulting in injury.
- Do not change the setting of the protection devices. If the pressure switch, thermal switch, or other protection device is shorted and operated forcibly, or parts other than those specified by Daikin are used, fire or explosion could result.

CAUTION

- Do not touch the switch with wet fingers. Touching a switch with wet fingers may result in electric shock.
- Do not allow children to play on or around the unit or it may result in injury.
- The heat exchanger fins are sharp enough to cut, and may result in injury if improperly used. To avoid injury wear glove or cover the fins when working around them.

- Do not touch the refrigerant pipes during and immediately after operation as the refrigerant pipes may be hot or cold, depending on the condition of the refrigerant flowing through the refrigerant piping, compressor, and other refrigerant cycle parts. It may result in your hands getting burns or frostbite if you touch the refrigerant pipes. To avoid injury, give the pipes time to return to normal temperature or, if you must touch them, be sure to wear proper gloves.
- Install drain piping to proper drainage. Improper drain piping may result in water leakage and property damage.
- Insulate piping to prevent condensation.
- Be careful when transporting the product.
- Do not turn off the power immediately after stopping operation. Always wait for at least 5 minutes before turning off the power. Otherwise, water leakage may result.
- Do not use a charging cylinder. Using a charging cylinder may cause the refrigerant to deteriorate.
- Refrigerant R410A in the system must be kept clean, dry, and tight.
  (a) Clean and Dry - Foreign materials (including mineral oils such as SUNISO oil or moisture) should be prevented from getting into the system.
  (b) Tight - R410A does not contain any chlorine, does not destroy the ozone layer, and does not reduce the earth's protection again harmful ultraviolet radiation. R410A can contribute to the greenhouse effect if it is released. Therefore take proper measures to check for the tightness of the refrigerant piping installation. Read the chapter Refrigerant Piping and follow the procedures.
- Since R410A is a blend, the required additional refrigerant must be charged in its liquid state. If the refrigerant is charged in a state of gas, its composition can change and the system will not work properly.
- The indoor unit is for R410A. See the catalog for indoor models that can be connected. Normal operation is not possible when connected to other units.
- Remote controller (wireless kit) transmitting distance can be shorter than expected in rooms with electronic fluorescent lamps (inverter or rapid start types). Install the indoor unit far away from fluorescent lamps as much as possible.
- Indoor and outside units are for indoor installation only.
- Do not install the air conditioner or heat pump in the following locations:
  (a) Where a mineral oil mist or oil spray or vapor is produced, for example, in a kitchen.
  Plastic parts may deteriorate and fall off and thus may result in water leakage.
  (b) Where corrosive gas, such as sulfurous acid gas, is produced.
  Corroding copper pipes or soldered parts may result in refrigerant leakage.
  (c) Near machinery emitting electromagnetic waves. Electromagnetic waves may disturb the operation of the control system and cause the unit to malfunction.
  (d) Where flammable gas may leak, where there is carbon fiber, or ignitable dust suspension in the air, or where volatile flammables such as thinner or gasoline are handled. Operating the unit in such conditions may result in a fire.
- Take adequate measures to prevent the outside unit from being used as a shelter by small animals. Small animals making contact with electrical parts may result in malfunctions, smoke, or fire. Instruct the customer to keep the area around the unit clean.

NOTE

- Install the power supply and transmission wires for the indoor and outside units at least 3.5 ft. (1 m) away from televisions or radios to prevent image interference or noise. Depending on the radio waves, a distance of 3.5 ft. (1 m) may not be sufficient to eliminate the noise.
- Dismantling the unit, treatment of the refrigerant, oil and additional parts must be done in accordance with the relevant local, state, and national regulations.
- Do not use the following tools that are used with conventional refrigerants: gauge manifold, charge hose, gas leak detector, reverse flow check valve, refrigerant charge base, vacuum gauge, or refrigerant recovery equipment.
- If the conventional refrigerant and refrigerator oil are mixed in R410A, the refrigerant result in deterioration.
- This air conditioner or heat pump is an appliance that should not be accessible to the general public.
- As design pressure is 478 psi (3.3 MPa), the wall thickness of field-installed pipes should be selected in accordance with the relevant local, state, and national regulations.

Codes and Regulations

This product is designed and manufactured to comply with national codes. Installation in accordance with such codes and/or prevailing local codes/regulations is the responsibility of the installer. The manufacturer assumes no responsibility for equipment installed in violation of any codes or regulations. Rated performance is achieved after 72 hours of operation.

Make sure to use a DAIKIN specified checker while measuring sub cooling. Do not use the check valve or the other port to measure it.

2 Inspection, handling and unpacking the unit

2.1 Inspection, handling and unpacking the unit

This chapter describes what to do after un-boxing the outside unit once it has been delivered on site.

Including:

- Unpacking and handling the outside unit
- Removing the accessories from the unit
- Removing the transportation stay

Keep the following in mind:

- At delivery, the unit must be checked for damage. Any damage must be reported immediately to the carrier's claims agent.
- Bring the packed unit as close as possible to its final installation position to prevent damage during transport.
- When handling the unit, take into account the following:
  Fragile, handle the unit with care.
  Keep the unit upright in order to avoid compressor damage.
- Choose in advance the path along which the unit is to be brought in.

- Lift the unit preferably with a crane and 2 belts of at least 16.41 ft (5 m) long as shown in the figure below. Always use protectors to prevent belt damage and pay attention to the position of the unit's center of gravity.

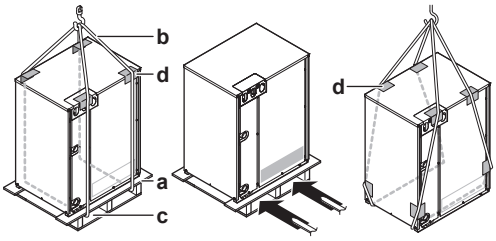

a Packaging material
b Belt sling
c Opening
d Protector

NOTE

Use a belt sling of ≤0.79 inch (20 mm) wide that adequately bears the weight of the unit.

- A forklift can only be used for transport as long as the unit remains on its pallet as shown above.

2.2 Opening the unit

Relief the unit from its packing material:

- Take care not to damage the unit when removing the shrink foil with a cutter.
- Remove the 4 bolts fixing the unit to its pallet.

WARNING

Tear apart and throw away plastic packaging bags so that nobody, especially children, can play with them. Possible risk: suffocation.

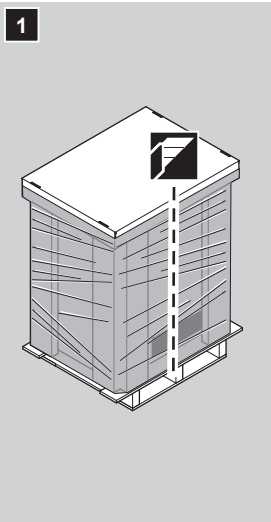

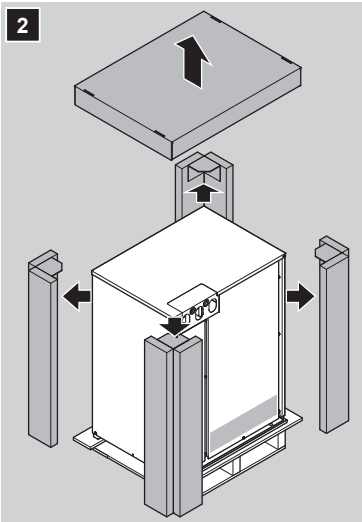

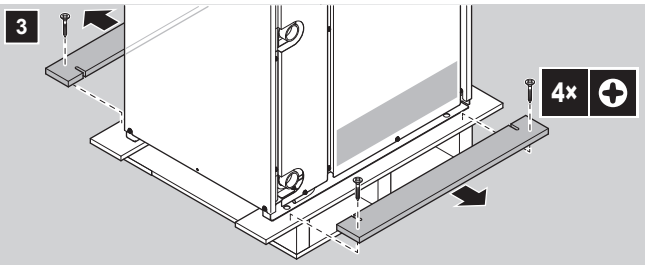

2.3 Accessories

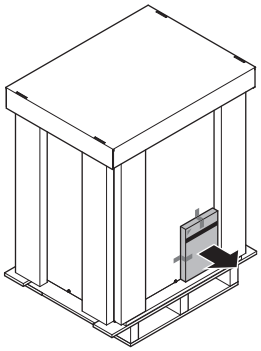

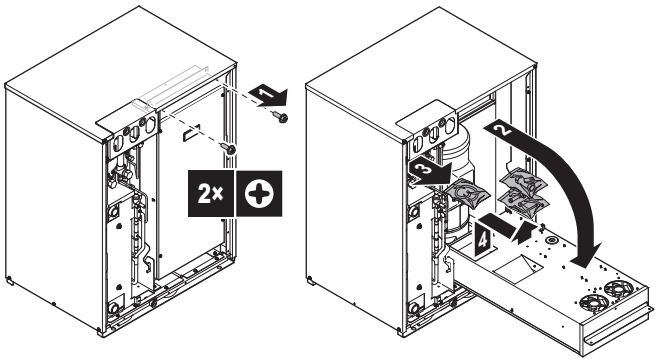

Make sure that all accessories are available in the unit.

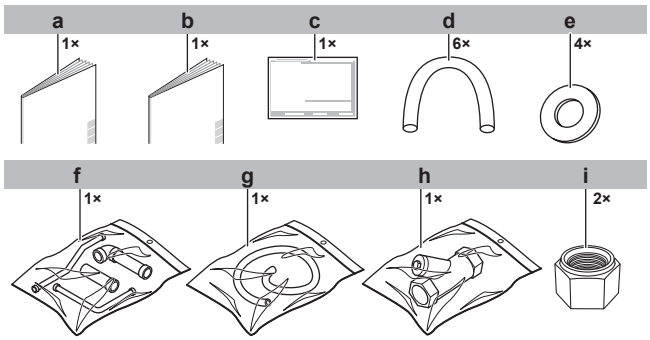

a Operation manual
b Installation manual
c Additional refrigerant charge label
d Vinyl tube
e Conduit mounting plate
f Piping accessory bag
g Hose
h Strainer (50 mesh, ANSI-ASME B1.20.1•1-1/4-11.5NPT female thread, only for water use)
i Pipe adaptor (ISO228-1•G1-1/4B→ANSI-ASME B1.20.1•1-1/4-11.5NPT)

Accessories: Diameters

Unit: inch (mm)

Accessory pipes	MBH	Øa	Øb	Øc	Ød
Liquid pipe ▪ Front connection[(a)] Øa Øb ▪ Top connection Øc Ød	96	1/2 (12.7)	1/2 (12.7)	1/2 (12.7)	3/8 (9.5)
	120				1/2 (12.7)
	144				

Unit: inch (mm)

Accessory pipes	MBH	Øa	Øb	Øc	Ød
Gas pipe ▪ Front connection[(a)] Øa Øb ▪ Top connection Øc Ød	96	1 (25.4)	1 (25.4)	1 (25.4)	7/8 (22.2)
	120				1-1/8 (28.6)
	144				

Accessory pipes	MBH	Øa	Øb	Øc	Ød
High pressure/Low pressure gas pipe ▪ Front connection[(a)] Øa Øb ▪ Top connection Øc Ød	96	1 (25.4)	1 (25.4)	1 (25.4)	3/4 (19.1)
	120				7/8 (22.2)
	144				

(a) Braze the straight accessory pipe onto the L-shaped accessory pipe in order to get the correct diameter to connect the field pipes (for front connection).

2.4 Method for removing shipping plate

NOTE

If the unit is operated with the transportation stay attached, abnormal vibration or noise may be generated.

The compressor transportation stay must be removed. It is installed under the compressor leg in order to protect the unit during transport. Proceed as shown in the figure and procedure below.

1. Remove the bolt.
2. Lift the insulation to access the compressor mounting bolt.
3. Slightly loosen the mounting bolt.
4. Remove the transportation stay as shown in the figure below.
5. Tighten the mounting bolt to 9.1 ft·lbf (12.3 N·m) of torque.

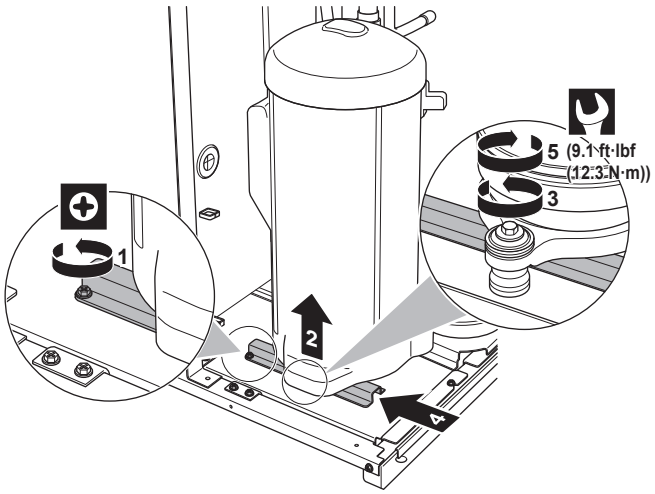

3 Identification and system layout

3.1 Standard operation limit

The figures below assume following operating conditions for indoor and outside units:

Equivalent pipe length ..... 25 ft (7.6 m)

Level difference..... 0

Cooling **Heating**

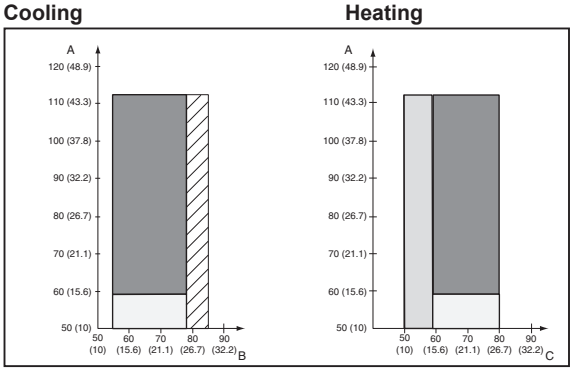

<In case of antifreeze usage>

Cooling **Heating**

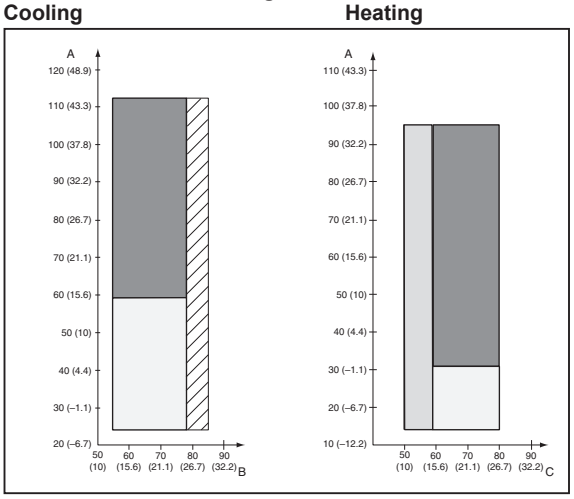

A Entering water temperature °F (°C)
B Indoor temperature °FWB (°CWB)
C Indoor temperature °FDB (°CDB)
Range for continuous operation
Range for operation
Range for pull down operation
Range for warming up operation

- Operation range of water flow rate is **13.2-39.6 gpm (50-150 L/min)**. (21.2-39.6 gpm (80-150 L/min) in case of antifreeze usage.)
- **The unit is designed for the following operation range;**
  Entering water temperature: 67-95°F (20-35°C)
  Relative humidity below 80%
  Water flow rate: 15.9 gpm (60 L/min) or more
- During cooling operation when the outside temperature is very low, it is possible that the thermostat switches off automatically in order to protect the unit from freezing.
- Hold ambient temperature at 35-104°FDB (2-40°CDB).
  Heat release from the unit (approx.): RWEQ96: 2730 Btu/h (0.8 kW), RWEQ120: 3412 Btu/h (1.0 kW), RWEQ144: 4436 Btu/h (1.3 kW)
  There is no heat release from the unit if the heat rejection cancellation is activated.
  It is recommended to always ventilate the room if this function is not activated.

3.2 Identification label: Outside unit

Location

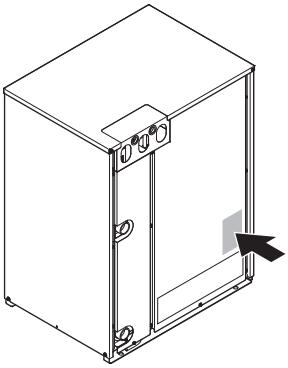

Model identification

Example: RW E Q 96 T A YC U

Code	Explanation
RW	Water-cooled
E	Heat pump system
Q	Refrigerant R410A
96	Capacity class
T	Model series
A	Minor model change
YC	Power supply
U	Standard unit for North America

3.3 About the outside unit

This installation manual concerns the VRV W water-cooled system air conditioner. The unit is full inverter driven, and can be used for cooling, heat pump and heat recovery applications.

Model line up:

Model	Description
RWEQ96~432	Heat pump and Heat recovery model for single or multi-use

Depending on the chosen type of unit, some functionality will or will not exist. It will be indicated throughout this installation manual and brought to your attention. Certain features have exclusive model rights.

These units are intended for indoor installation and aimed for heat pump applications including water to air.

The normal operating water inlet temperature must be between 50°F (10°C) and 113°F (45°C). Use of antifreeze/brine will allow extension of operating ranges to 14°F (–10°C) in heating and 23°F (–5°C) in cooling.

3.4 System layout

INFORMATION
Not all combinations of indoor units are allowed.

Heat recovery system

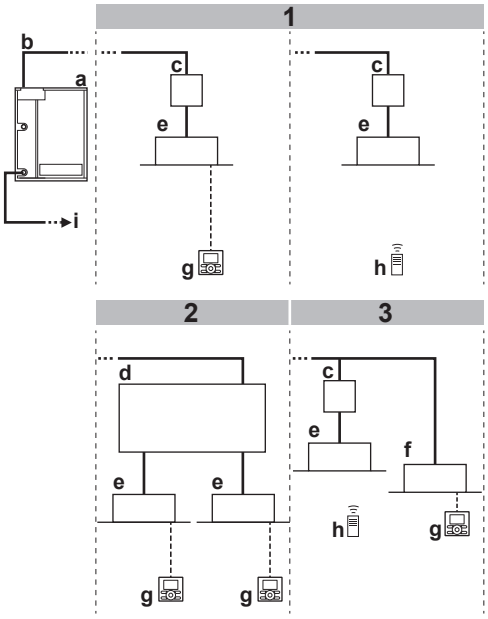

- **a** Unit
- **b** Refrigerant piping
- **c** Branch selector unit
- **d** Multi branch selector unit
- **e** VRV indoor unit
- **f** Cooling only VRV indoor unit
- **g** User interface (dedicated depending on indoor unit type)
- **h** User interface (wireless, dedicated depending on indoor unit type)
- **i** Water system connection

Heat pump system

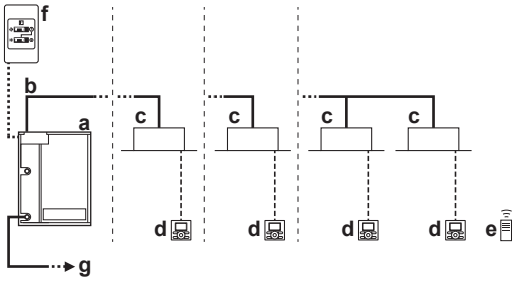

- **a** Unit
- **b** Refrigerant piping
- **c** VRV indoor unit
- **d** User interface (dedicated depending on indoor unit type)
- **e** User interface (wireless, dedicated depending on indoor unit type)
- **f** Cool/heat selector
- **g** Water system connection

Water system

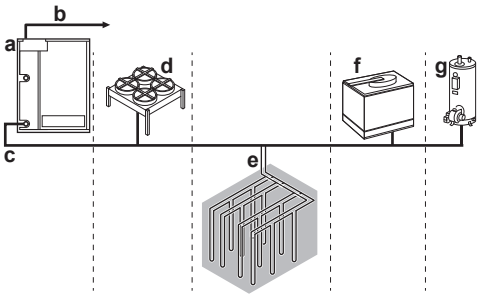

- **a** Unit
- **b** Connection to refrigerant system
- **c** Water piping
- **d** Dry cooler
- **e** Antifreeze loop
- **f** Closed cooling tower
- **g** Boiler

3.5 Combining units and options

3.5.1 About combining units and options

NOTE

Refer to the technical engineering data for latest options and allowable combinations.

The VRV W T-Series water-cooled system can be combined with several types of indoor units and is intended for R410A use only.

For an overview which units are available you can consult the product catalogue for VRV W T-Series water-cooled system.

An overview is given indicating the allowed combinations of indoor units and outside units. Not all combinations are allowed. They are subject to rules (combination between outside-indoor, single module use, multiple module use, combinations between indoor units, etc.) mentioned in the technical engineering data.

3.5.2 Connection Ratio

Connection Ratio = Total capacity index of the indoor units / Capacity index of the outside units

Type	Min. connection ratio Types of connected outside units RWEQ-T type
Single outside units	50%
Double outside units	
Triple outside units	

Type	Max. connection ratio Types of connected indoor units		
	When using only FXDQ, FXMQ-P, FXAQ, FXSQ07~54T	When using at least one FXFQ07/09, FXZQ05T, FXSQ05T	All other models
Single outside units	150% (*1)	150% (*1)	150% (*1)
Double outside units		130%	130%
Triple outside units	150% (*1)	130% (*2)	130% (*2)

*1. If the operational capacity of indoor units is more than 130%, low airflow operation is enforced in all the indoor units.

*2. 120% for RWEQ432

3.5.3 Possible combinations of outside units

Possible single module units

RWEQ96
RWEQ120
RWEQ144

Possible standard combinations of units

RWEQ192~432 consists of 2 or 3 RWEQ96~144 units.

RWEQ192 = RWEQ96 + 96
RWEQ216 = RWEQ120 + 96
RWEQ240 = RWEQ120 + 120
RWEQ264 = RWEQ120 + 144
RWEQ288 = RWEQ144 + 144
RWEQ312 = RWEQ120 + 96 + 96
RWEQ336 = RWEQ120 + 120 + 96
RWEQ360 = RWEQ120 + 120 + 120
RWEQ384 = RWEQ144 + 120 + 120
RWEQ408 = RWEQ144 + 144 + 120
RWEQ432 = RWEQ144 + 144 + 144

3.5.4 Outside Unit Combinations

Total capacity of indoor units needs to be within the specified range.

<Outside unit>	<Total capacity index of indoor units>
RWEQ96	48-124
RWEQ120	60-156
RWEQ144	72-187
RWEQ192	96-249
RWEQ216	108-280
RWEQ240	120-312
RWEQ264	132-343
RWEQ288	144-374
RWEQ312	156-405
RWEQ336	168-436
RWEQ360	180-468
RWEQ384	192-499
RWEQ408	204-530
RWEQ432	216-561

NOTE

Higher capacity than the above table can be selected, this may affect heating and cooling capacity. For additional information see technical engineering data.

3.5.5 Possible options for the outside unit

INFORMATION

Refer to the technical engineering data for the latest option names.

Refrigerant branching kit

In case of heat pump system	
Description	**Model name**
Refnet header	KHRP26M22H9
	KHRP26M33H9
	KHRP26M72H9
	KHRP26M73HU9
Refnet joint	KHRP26A22T9
	KHRP26A33T9
	KHRP26M72TU9
	KHRP26M73TU9

In case of heat recovery system	
Description	**Model name**
Refnet header	KHRP25M33H9
	KHRP25M72H9
	KHRP25M73HU9
Refnet joint	KHRP25A22T9
	KHRP25A33T9
	KHRP25M72TU9
	KHRP25M73TU9

For the selection of the optimal branching kit, please refer to "4.3.3 To select refrigerant branch kits" on page 12.

Outside multi connection piping kit

In case of heat pump system	
Number of outside units	**Model name**
2	BHFP22T84U
3	BHFP22T126U

In case of heat recovery system	
Number of outside units	**Model name**
2	BHFP26T84U
3	BHFP26T126U

Cool/heat selector

In order to control the cooling or heating operation from a central location, the following option can be connected:

Description	Model name
Cool/heat change over switch	KRC19-26A6
Cool/heat change over PCB	BRP2A81
With optional fixing box for the switch	KJB111A

External control adaptor (DTA104A61/62)

To instruct specific operation with an external input coming from a central control the external control adaptor can be used. Instructions (group or individual) can be instructed for low noise operation and power consumption limitation operation.

PC configurator cable (999482P3)

You can make several commissioning field settings through a personal computer interface. For this option 999482P3 is required which is a dedicated cable to communicate with the outside unit.

4 Preparation

4.1 Overview: Preparation

This chapter describes what you have to do and know before going on-site.

It contains information about:

- Preparing the installation site
- Preparing the refrigerant piping
- Preparing the water piping
- Preparing the electrical wiring

4.2 Preparing installation site

4.2.1 Installation site requirements of the outside unit

CAUTION

This unit is designed for indoor installation only.

- Provide required service space around the unit as stated in the technical engineering book or in section "11.2 Service space: Outside unit" on page 48 of this manual.
- Ensure that the foundation is strong enough to support the weight of the unit and the floor is flat to prevent vibration and noise generation.
- Make sure the area is well ventilated. Do NOT block any ventilation openings.
- Make sure the unit is level.
- Make sure to install the unit in a machine room that is free of moisture. The unit is designed for indoor use only.
- Select the location of the unit in such a way that the sound generated by the unit does not disturb anyone, and the location is selected according the applicable legislation.

Do NOT install the unit in the following places:

- In potentially explosive atmospheres.
- In places where there is machinery that emits electromagnetic waves. Electromagnetic waves may disturb the control system, and cause malfunction of the equipment.
- In places where there is a risk of fire due to the leakage of flammable gases (example: thinner or gasoline), carbon fiber, ignitable dust.
- In places where corrosive gas (example: sulphurous acid gas) is produced. Corrosion of copper pipes or soldered parts may cause the refrigerant to leak.
- In places where a mineral oil mist, spray or vapor may be present in the atmosphere. Plastic parts may deteriorate and fall off or cause water leakage.

NOTE

This is a class A product. In a domestic environment this product may cause radio interference in which case the user may be required to take adequate measures.

NOTE

The equipment described in this manual may cause electronic noise generated from radio-frequency energy. The equipment complies to specifications that are designed to provide reasonable protection against such interference. However, there is no guarantee that interference will not occur in a particular installation.

It is therefore recommended to install the equipment and electric wires keeping proper distances away from stereo equipment, personal computers, etc.

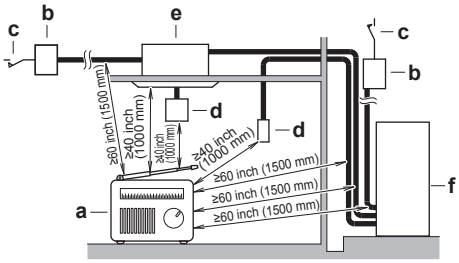

a Personal computer or radio
b Fuse
c Ground leakage protector
d User interface
e Indoor unit
f Outside unit

In places with weak reception, keep distances of 10 ft (3 m) or more to avoid electromagnetic disturbance of other equipment and use conduit tubes for power and transmission lines.

CAUTION

Appliance not accessible to the general public, install it in a secured area, protected from easy access.

This unit, both indoor and outside, is suitable for installation in a commercial and light industrial environment.

- When installing, take earthquakes into account, improper installation may result in the unit turning over.
- Take care that in the event of a water leak, water cannot cause any damage to the installation space and surroundings.
- When installing the unit in a small room, take measures in order to keep the refrigerant concentration from exceeding allowable safety limits in the event of a refrigerant leak, refer to "About safety against refrigerant leaks" on page 10.

CAUTION

Excessive refrigerant concentrations in a closed room can lead to oxygen deficiency.

- Ensure that water cannot cause any damage to the location by adding water drains to the foundation and prevent water traps in the construction.
- Install drain piping to ensure proper drainage and insulate piping to prevent condensation. Improper drain piping may result in indoor water leakage and property damage.

4.2.2 Securing safety against refrigerant leaks

About safety against refrigerant leaks

The installer and system specialist shall secure safety against leakage according to local regulations or standards. The following standards may be applicable if local regulations are not available.

This system uses R410A as refrigerant. R410A itself is an entirely safe non-toxic, non-combustible refrigerant. Nevertheless care must be taken to ensure that the system is installed in a room which is sufficiently large. This assures that the maximum concentration level of refrigerant gas is not exceeded, in the unlikely event of major leak in the system and this in accordance to the local applicable regulations and standards.

About the maximum concentration level

The maximum charge of refrigerant and the calculation of the maximum concentration of refrigerant is directly related to the humanly occupied space in to which it could leak.

The unit of measurement of the concentration is lbs/ft³ (kg/m³) (the weight in lbs (kg) of the refrigerant gas in 1 ft³ (1 m³) volume of the occupied space).

Compliance to the local applicable regulations and standards for the maximum allowable concentration level is required.

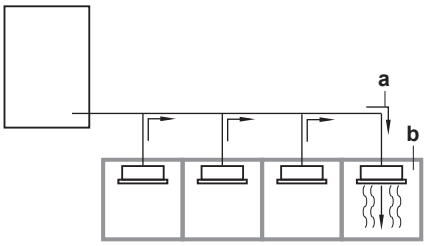

a Direction of the refrigerant flow
b Room where refrigerant leak has occurred (outflow of all the refrigerant from the system)

Pay special attention to places such as basements etc., where refrigerant can accumulate, since refrigerant is heavier than air.

To check the maximum concentration level

Check the maximum concentration level in accordance with steps 1 to 4 below and take whatever action is necessary to comply.

1. Calculate the amount of refrigerant in lbs (kg) charged to each system separately.

   Formula: **A+B=C**

   A Amount of refrigerant in a single unit system (amount of refrigerant with which the system is charged before leaving the factory).
   B Additional charging amount (amount of refrigerant added locally).
   C Total amount of refrigerant in lbs (kg) in the system.

NOTE

Where a single refrigerant facility is divided into 2 entirely independent refrigerant systems, use the amount of refrigerant with which each separate system is charged.

2. Follow local code requirements (ASHRAE-15 2007 & ASHRAE-34 2007).

Disposal requirements

Dismantling of the unit, treatment of the refrigerant, of oil and of other parts must be done in accordance with relevant local and national legislation.

4.3 Refrigerant pipe size and allowable length

NOTE

The refrigerant R410A requires strict cautions for keeping the system clean, dry and tight.

- Clean and dry: foreign materials (including mineral oils or moisture) should be prevented from getting mixed into the system.
- Tight: R410A does not contain any chlorine, does not destroy the ozone layer, and does not reduce earth's protection against harmful ultraviolet radiation. R410A can contribute slightly to the greenhouse effect if it is released. Therefore we should take special attention to check the tightness of the installation.

4.3.1 Selection of piping material

NOTE

Piping and other pressure containing parts shall comply with the applicable legislation and shall be suitable for refrigerant. Use phosphoric acid deoxidized seamless copper for refrigerant.

NOTE

- All field piping must be installed by a licensed refrigeration technician and must comply with relevant local and national regulations.
- After piping work is complete, do not under any circumstances open the stop valve until "5.8 Connecting the electrical wiring" on page 30. "6 Checking of device and installation conditions" on page 34 are complete.
- Do not use flux when brazing the refrigerant piping. Use the phosphor copper brazing filler metal (B-Cu93P-710/795 : ISO 3677) which does not require flux. Flux has extremely negative effect on refrigerant piping systems. For instance, if the chlorine based flux is used, it will cause pipe corrosion or, in particular, if the flux contains fluorine, it will damage the refrigerant oil.

- Use only pipes which are clean inside and outside and which do not accumulate harmful sulfur, oxidants, dirt, cutting oils, moisture, or other contamination. (Foreign materials inside pipes including oils for fabrication must be 0.14 gr/10 ft (30 mg/10 m) or less.)
- Use the following items for the refrigerant piping.

  Material : Jointless phosphor-deoxidized copper pipe.

  Size : See "4.3.2 To select the piping size".

  Thickness : Select a thickness for the refrigerant piping which complies with national and local laws.
- For piping work, follow the maximum tolerated length, difference in height, and length after a branch indicated in the "4.3.7 Piping length requirements" on page 15.
- Outside unit multi connection piping kit and refrigerant branch kit (sold separately) are needed for connection of piping between outside units (in case of multi system) and piping branches.
- Use only separately sold items selected specifically according to the outside unit multi connection piping kit, the refrigerant branch kit selection in the "4.3.3 To select refrigerant branch kits" on page 12.

4.3.2 To select the piping size

INFORMATION

Please select the proper pipe sizes depending on the mode of your system. There are 2 possible modes:

- heat pump,
- heat recovery.

Determine the proper size using the following tables and reference figure (only for indication).

In case of heat pump mode

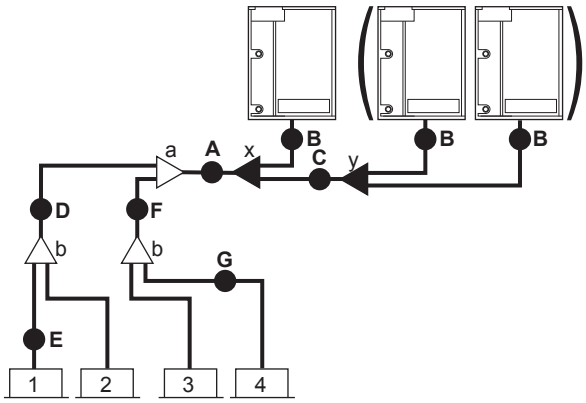

1,2,3,4 VRV indoor unit
a,b Indoor branch kit
x,y Outside multi connection kit

In case of heat recovery mode

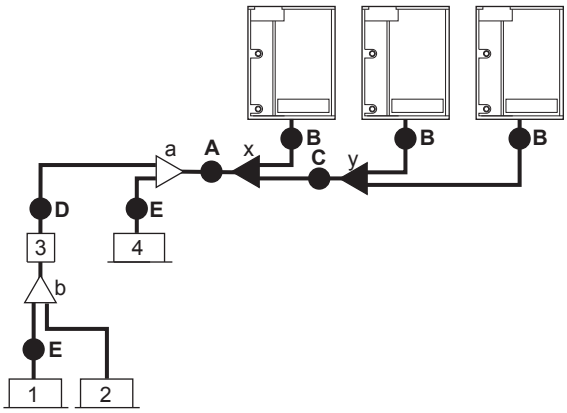

1,2 VRV indoor unit
3 Branch selector unit
4 Cooling only VRV indoor unit
A~E Piping
a,b Indoor branch kit
x,y Outside multi connection kit

A, B, C: Piping between outside unit and (first) refrigerant branch kit

Choose from the following table in accordance with the outside unit total capacity type, connected downstream.

In case of heat pump mode

Unit: inch (mm)

Outside unit capacity type (MBH)	Piping outer diameter size	
	Gas pipe	Liquid pipe
96	7/8 (22.2)	3/8 (9.5)
120, 144	1-1/8 (28.6)	1/2 (12.7)
192, 216		5/8 (15.9)
240	1-3/8 (34.9)	
264~336		3/4 (19.1)
360~432	1-5/8 (41.3)	

In case of heat recovery mode

Unit: inch (mm)

Outside unit capacity type (MBH)	Piping outer diameter size		
	Suction gas pipe	High/low pressure gas pipe	Liquid pipe
96	7/8 (22.2)	3/4 (19.1)	3/8 (9.5)
120	1-1/8 (28.6)		1/2 (12.7)
144		7/8 (22.2)	
192, 216		1-1/8 (28.6)	5/8 (15.9)
240	1-3/8 (34.9)		
264~336			3/4 (19.1)
360~432	1-5/8 (41.3)	1-3/8 (34.9)	

D: Piping between refrigerant branch kits or refrigerant branch kit and branch selector unit

Choose from the following table in accordance with the indoor unit total capacity type, connected downstream. Do not let the connection piping exceed the refrigerant piping size chosen by the general system model name.

In case of heat pump mode

Unit: inch (mm)

Indoor unit capacity index	Piping outer diameter size	
	Gas pipe	Liquid pipe
<54	5/8 (15.9)	3/8 (9.5)
54≤x<72	3/4 (19.1)	
72≤x<111	7/8 (22.2)	
111≤x<162	1-1/8 (28.6)	1/2 (12.7)
162≤x<230		5/8 (15.9)
230≤x<300	1-3/8 (34.9)	3/4 (19.1)
≥300	1-5/8 (41.3)	

In case of heat recovery mode

Unit: inch (mm)

Indoor unit capacity index	Piping outer diameter size		
	Suction gas pipe	High pressure/low pressure gas pipe	Liquid pipe
<54	5/8 (15.9)	1/2 (12.7)	3/8 (9.5)
54≤x<72	3/4 (19.1)	5/8 (15.9)	
72≤x<111	7/8 (22.2)	3/4 (19.1)	
111≤x<162	1-1/8 (28.6)		1/2 (12.7)
162≤x<230		1-1/8 (28.6)	5/8 (15.9)
230≤x<300	1-3/8 (34.9)		3/4 (19.1)
≥300	1-5/8 (41.3)		

Example:

- Downstream capacity for E=[capacity index of unit 1]
- Downstream capacity for D=[capacity index of unit 1]+[capacity index of unit 2]

E: Piping between refrigerant branch kit or branch selector unit and indoor unit

For heat pump mode and heat recovery mode

Pipe size for direct connection to indoor unit must be the same as the connection size of the VRV indoor units.

Unit: inch (mm)

Indoor unit capacity index	Piping outer diameter size	
	Gas pipe	Liquid pipe
05~18	1/2 (12.7)	1/4 (6.4)
24~54	5/8 (15.9)	3/8 (9.5)
72	3/4 (19.1)	
96	7/8 (22.2)	

- If a size-up of the piping is required, refer to the table below.

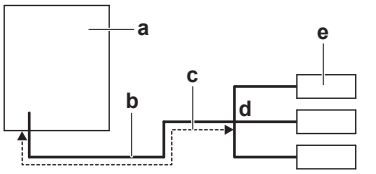

a Outside unit
b Main pipes
c Increase
d First refrigerant branch kit
e Indoor unit

Unit: inch (mm)

Size up	
MBH class	Liquid piping outer diameter size
96	3/8 → 1/2 (9.5 → 12.7)
120, 144	1/2 → 5/8 (12.7 → 15.9)
192~240	5/8 → 3/4 (15.9 → 19.1)
264~432	3/4 → 7/8 (19.1 → 22.2)

4.3.3 To select refrigerant branch kits

Refrigerant refnets

For piping example, refer to "4.3.2 To select the piping size" on page 11.

- When using refnet joints at the first branch counted from the outside unit side, choose from the following table in accordance with the capacity of the outside unit (example: refnet joint a).

Outside unit capacity type (MBH)	2 pipes	3 pipes
96	KHRP26A33T9	KHRP25A33T9
120~216	KHRP26M72TU9	KHRP25M72TU9
240~432	KHRP26M73TU9	KHRP25M73TU9

- For refnet joints other than the first branch (example refnet joint b), select the proper branch kit model based on the total capacity index of all indoor units connected after the refrigerant branch.

Indoor unit capacity index	2 pipes	3 pipes
<72	KHRP26A22T9	KHRP25A22T9
72≤x<111	KHRP26A33T9	KHRP25A33T9
111≤x<246	KHRP26M72TU9	KHRP25M72TU9
≥246	KHRP26M73TU9	KHRP25M73TU9

- Concerning refnet headers, choose from the following table in accordance with the total capacity of all the indoor units connected below the refnet header.

Indoor unit capacity index	2 pipes	3 pipes
<72	KHRP26M22H9 (Max. 4 branches) or KHRP26M33H9 (Max. 8 branches)	KHRP25M33H9
72≤x<111	KHRP26M33H9	

Indoor unit capacity index	2 pipes	3 pipes
111≤x<230	KHRP26M72H9	KHRP25M72H9
≥230	KHRP26M73HU9	KHRP25M73HU9

INFORMATION

If not stated otherwise, maximum 8 branches can be connected to a header.

- How to choose an outside multi connection piping kit. Choose from the following table in accordance with the number of outside units.

Number of outside units	Heat pump mode	Heat recovery mode
2	BHFP22T84U	BHFP26T84U
3	BHFP22T126U	BHFP26T126U

INFORMATION

Reducers or T-joints are field supplied.

NOTE

Refrigerant branch kits can only be used with R410A.

4.3.4 System piping (length) limitation

Make sure the piping installation does not exceed the maximum allowable pipe length, the allowable level difference, and the allowable length after branching. To illustrate the piping length requirements, 6 cases are discussed in the chapters below. They describe both standard and non-standard outside unit combinations.

Definitions

Term	Definition
Actual piping length	Pipe length between outside[(a)] and indoor units
Equivalent piping length	Pipe length between outside[(a)] and indoor units, including the equivalent length of the piping accessories
Total piping length	Total piping length, from the outside to all indoor units

(a) If the system is a multi outside installation, re-read "the first outside unit branch as seen from the indoor unit".

Equivalent length of the piping accessories

Accessory	Equivalent length
Refnet joint	1.6 ft (0.5 m)
Refnet header	3.3 ft (1 m)
Single BSQ36-60T	13 ft (4 m)
Single BSQ96T	19 ft (6 m)
Multi BS4-6Q54T	19 ft (6 m)
Multi BS8-12Q54T	33 ft (10 m)

System piping (length) limitations

Term	Definition	Distance
Actual piping length	Pipe length between outside[(a)] and indoor units	540 ft (165 m)
Equivalent piping length[(b)]	Pipe length between outside[(a)] and indoor units	623 ft (190 m)
Total actual piping length	Total piping length from the outside[(a)] to all indoor units	980 ft (300 m)
H1	Height difference between outside and indoor units	164 ft (50 m)/130 ft (40 m) [(b)]
H2	Height difference between indoor units	98 ft (30 m)
H3	Height difference between outside units	16 ft (5 m)

(a) In the case of an outside units multi system, "outside unit" should be read as the "first outside unit multi connection piping kit", seen from the indoor units side.

(b) The allowable height difference is 164 ft (50 m) in case the outside unit is positioned higher than the indoor unit, and 130 ft (40 m) in case the outside unit is positioned lower than the indoor unit.

4.3.5 Single module and standard multi-outside-unit combinations

In case of heat pump mode

Connection with indoor units and air handling units

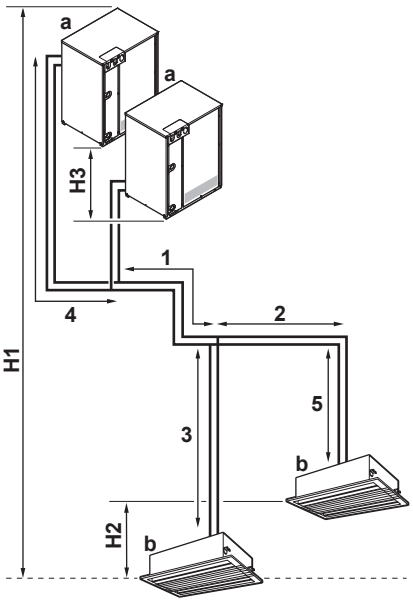

a Outside unit
b VRV indoor unit

Pipe	Maximum length (actual/equivalent)
Longest pipe from the outside unit or the last indoor unit (1+3, 1+2+5)	540 ft (165 m)/623 ft (190 m)[(a)]
Longest pipe after the first branch (3, 2+5)	295 ft (90 m)[(b)]/—
In case of a multi-outside setup: longest pipe from the outside unit to the last multi-outside piping branch (4)	33 ft (10 m)/43 ft (13 m)
Total pipe length (1+2+3+5)	980 ft (300 m)/—[(c)]
The actual piping length from each indoor units to the nearest refrigerant branch kit	130 ft (40 m)/—

(a) If the equivalent piping length is more than 295 ft (90 m), size up the main liquid piping according to "4.3.2 To select the piping size" on page 11.

(b) If actual piping length of indoor units where difference from the indoor unit nearest to the outside unit is more than 130 ft (40 m), please size up according to "4.3.7 Piping length requirements" on page 15.

(c) In the case of an outside units multi system, "outside unit" should be read as the "first outside unit multi connection piping kit", seen from the indoor units side.

In case of heat recovery mode

Connection with only indoor units

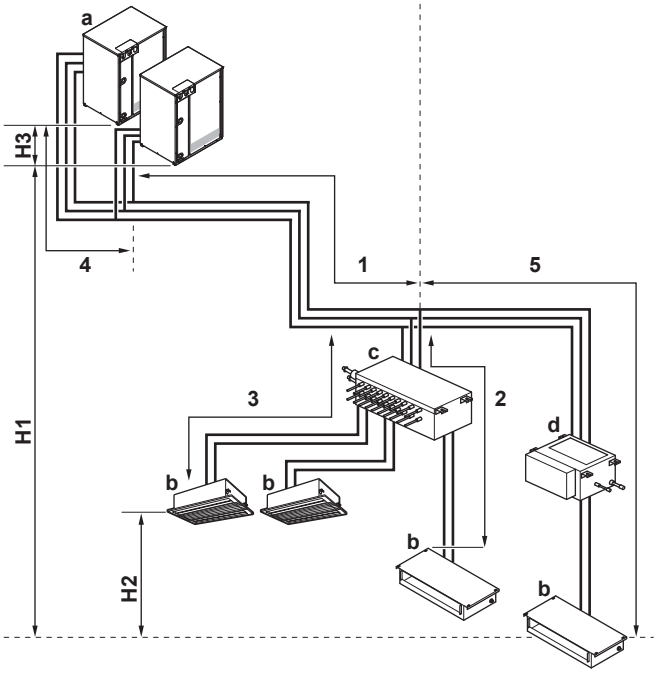

a Outside unit
b VRV indoor unit
c Multi branch selector unit
d Single branch selector unit

The actual piping length from each indoor units to the nearest refrigerant branch kit.

Multi branch selector box is to be considered as a branch, a single branch selector box is not considered as a branch.

Pipe	Maximum length (actual/ equivalent)
Longest pipe from the outside unit or the last multi-outside piping branch (1+2, 1+3, 1+5)	540 ft (165 m)/623 ft (190 m)[(a)]
Longest pipe after the first branch (3, 2, 5)	295 ft (90 m)[(b)]/—
In case of a multi-outside setup: longest pipe from the outside unit to the last multi-outside piping branch (4)	33 ft (10 m)/43 ft (13 m)
Total pipe length (1+2+3+5)	980 ft (300 m)/—[(c) (d)]

(a) If the equivalent piping length is more than 295 ft (90 m), size up the main liquid pipings according to "4.3.2 To select the piping size" on page 11.
(b) If actual piping length of indoor units where difference from the indoor unit nearest to the outside unit is more than 130 ft (40 m), please size up according to "4.3.7 Piping length requirements" on page 15.
(c) In the case of an outside units multi system, "outside unit" should be read as the "first outside unit multi connection piping kit", seen from the indoor units side.
(d) Total pipe length can be extended to 1640 ft (500 m) when total refrigerant amount is as follows:
Single system ≤ 77 lbs (35 kg)
Double system ≤ 145 lbs (66 kg)
Triple system ≤ 150 lbs (68 kg)

4.3.6 Multiple module: Possible layouts

- The piping between the outside units must be routed level or slightly upward to avoid the risk of oil retention into the piping.

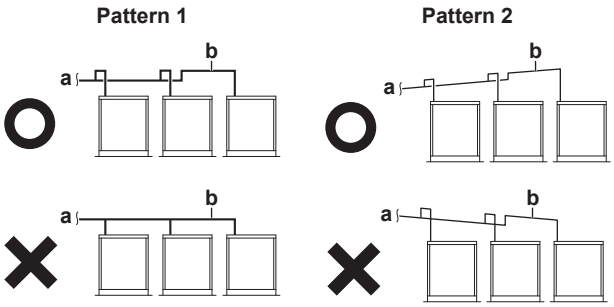

a To indoor unit
b Piping between outside units
X Not allowed (oil remains in piping)
O Allowed

- If the piping length between the outside unit connecting pipe kit or between the outside units exceeds 6.5 ft (2 m), create a rise of 8 inch (200 mm) or more in the suction gas and high/low pressure gas line within a length of 6.5 ft (2 m) from the kit.
- For the gas piping (both discharge and suction gas piping in case of the heat recovery system) after the branch, install a trap of 8 inch (200 mm) or more using the piping included in the piping kit for connecting the outside unit. Otherwise, the refrigerant may stay in the piping, causing damage to the outside unit.

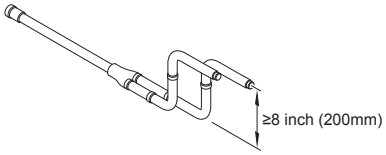

If	Then
≤6.5 ft (2 m)	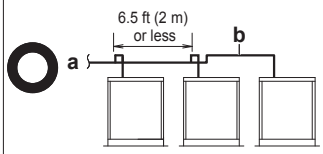
>6.5 ft (2 m)	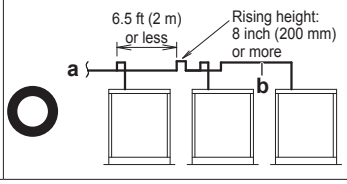

a To indoor unit
b Piping between outside units

NOTE

There are restrictions on the refrigerant pipe connection order between outside units during installation in case of a multiple module system. Install according to following restrictions. The capacities of outside units A, B and C must fulfill the following restriction conditions: A≥B≥C.

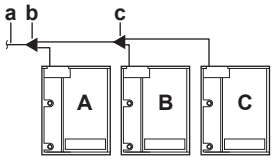

a To indoor units

b Outside unit multi connecting piping kit (first branch)

c Outside unit multi connecting piping kit (second branch)

4.3.7 Piping length requirements

In case of heat pump mode

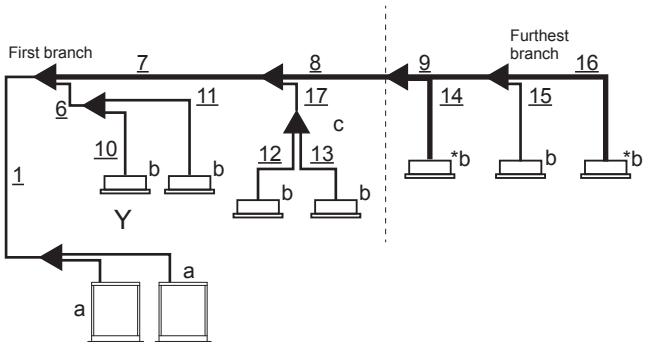

If actual piping length of indoor units 48 types, 54 types, and 72 types, 96 type where difference from the indoor unit (Y) nearest to the outside unit is more than 130 ft (40 m),

Example:

b is neither 48 types nor 54 types nor 72 types nor 96 type

*b is 48 types or 54 types or 72 types or 96 type

(6+11)–(6+10)<130 ft (40 m)

(7+12+17)–(6+10)<130 ft (40 m)

(7+13+17)–(6+10)<130 ft (40 m)

(7+8+14)–(6+10)>130 ft (40 m)

(7+8+9+15)–(6+10)>130 ft (40 m)

(7+8+9+16)–(6+10)>130 ft (40 m)

please size up both liquid pipe and gas pipe until the closest branch. (14, 16)

If the actual pipe length difference after the first branch is more than 130 ft (40 m), please size up the piping until the last branch. (Liquid pipe and gas pipe at Heat pump mode) (7, 8, 9).

The total piping length:

1+(7+8+9+14+16)×2+6+10+11+12+13+15+17)≤980 ft (300 m)

If size exceeds the main pipe size due to size increase, please also size up main pipe according to "4.3.2 To select the piping size" on page 11.

In case of heat recovery mode

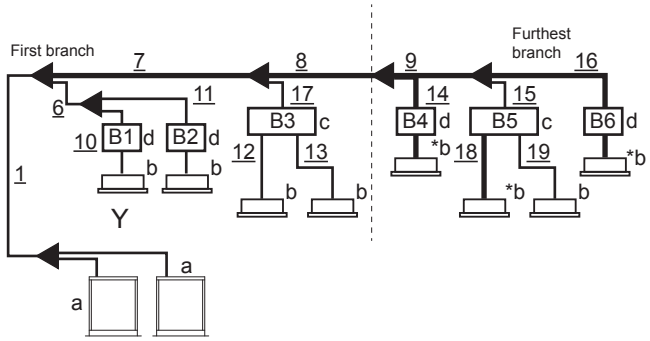

B1-B6 Branch selector unit

If actual piping length of indoor units 48 types, 54 types, and 72 types, 96 type where difference from the indoor unit (Y) nearest to the outside unit is more than 130 ft (40 m),

Example:

b is neither 48 types nor 54 types nor 72 types nor 96 type

*b is 48 types or 54 types or 72 types or 96 type

(6+11)–(6+10)<130 ft (40 m)

(7+12+17)–(6+10)<130 ft (40 m)

(7+13+17)–(6+10)<130 ft (40 m)

(7+8+14)–(6+10)>130 ft (40 m)

(7+8+9+15)–(6+10)>130 ft (40 m)

(7+8+9+16)–(6+10)>130 ft (40 m)

(7+8+9+15+18)–(6+10)>130 ft (40 m)

(7+8+9+15+19)–(6+10)>130 ft (40 m)

please size up both liquid pipe and gas pipe until the closest branch. (14, 16, 18)

If the actual pipe length difference after the first branch is more than 130 ft (40 m), please size up the piping until the last branch. (Liquid pipe only at Heat Recovery mode) (7, 8, 9).

The total piping length:

1+(7+8+9+14+16+18)×2+6+10+11+12+13+15+17+19)≤980 ft (300 m)

If size exceeds the main pipe size due to size increase, please also size up main pipe according to "4.3.2 To select the piping size" on page 11.

4.4 Preparing water piping

4.4.1 Water quality requirements

	Cooling water[(b)] and circulation system		Hot water system[(c)]		Tendency[(d)]	
Item[(a)]	**Circulation water**	**Make-up water**	**Circulation water (68~140°F) (20~60°C)**	**Make-up water**	**Corrosion**	**Scale**
Standard items						
pH (77°F (25°C))	6.5~8.2	6.0~8.0	7.0~8.0		○	○
Electrical conductivity (mS/ft (mS/m)) (77°F (25°C))	<24.4 (80)	<9.1 (30)	<9.1 (30)		○	○
Chloride ions (mg Cl^-/l)	<200	<50	<50		○	
Sulfate ions (mg SO_4^{2-}/l)	<200	<50	<50		○	
Acid consumption (pH 4.8) (mg $CaCO_3$/l)	<100	<50	<50			○
Total hardness (mg $CaCO_3$/l)	<200	<70	<70			○
Calcium hardness (mg $CaCO_3$/l)	<150		<50			○

	Cooling water[b] and circulation system		Hot water system[c]		Tendency[d]	
Item[a]	Circulation water	Make-up water	Circulation water (68~140°F) (20~60°C)	Make-up water	Corrosion	Scale
Ionic-state silica (mg SiO_2/l)	<50	<30	<30			○
Reference items						
Iron (mg Fe/l)	<1.0	<0.3	<1.0	<0.3	○	○
Copper (mg Cu/l)	<0.3	<0.1	<1.0	<0.1	○	
Sulfate ion (mg S^{2-}/l)	—				○	
Ammonium ion (mg NH_4^+/l)	<1.0	<0.1	<0.3	<0.1	○	
Residual chlorine (mg Cl/l)	<0.3		<0.25	<0.3	○	
Free carbon dioxide (mg CO_2/l)	<4.0		<0.4	<4.0	○	
Stability index	6.0~7.0	—	—		○	○

(a) These items represent typical causes of corrosion and scale.
(b) In a condenser water circuit that uses a closed cooling tower, the closed circuit circulating water and make-up water MUST meet the water quality standards for the hot water system, and passing water and make-up water MUST satisfy those for the circulation type cooling water system.
(c) Corrosion has a tendency to occur when water temperature is high (104°F (40°C) or higher), and if metals with no protective coating are directly exposed to water, it would be a good idea to take effective measures against corrosion such as adding a corrosion inhibitor or deaeration treatment.
(d) The circle marks in the columns indicate a tendency for corrosion or scale to develop.

NOTE

- The supply water MUST be clean tap water, industrial water or clean underground water. Do NOT use purified or softened water.
- Do NOT use once-through water. It may cause corrosion.

4.4.2 Water circuit requirements

INFORMATION

Also read the precautions and requirements in the "General safety precautions" chapter.

NOTE

Use water pipes compiled with the local and national codes.

- The water pressure resistance of water piping of this outside unit is 464 psig (3.2 MPa).
- The connection port for water piping is located in the front. The connection ports for drain piping are located in the front and back. When using the back port, change the cast iron plug from the back to the front and securely close it.
- In indoor use, piping work should be such that no water drops on the outer plate.
- The lateral protruding section of the drain piping should be short (within 15-3/4 inch (400 mm)) and installed in a downward direction.
  The diameter of drain pipe should be the same as the diameter of unit connection (3/8 inch (9.5 mm)) or more.
- The diameter of water pipe should be the same as the diameter of unit connection (1-1/4 inch (31.8 mm)) or more.
- Install an air purge valve in the midway of the water piping to prevent cavitation.
- After completing the drain piping work, make sure that the water runs smoothly without any clogging by dust.
- Do not connect the drain outlet to the water outlet.
- Install a strainer (standard accessory) in the inlet of water piping within a distance of 4.9 ft (1.5 m) from the outside unit.
  (If sand, waste or rust particles are mixed in the water circulation system, metal materials will become corrosive.)
- Install insulation on the inlet/outlet of water piping to prevent condensation and freezing.
  At installing insulation on water in/outlet pipe, use Polyurethane foam thickness 3/16 inch (5 mm) for insulation of water piping socket on heat exchanger.
- Install insulation up to the base of heat exchanger as shown in the figure 6.
- Install a gate valve for chemical cleaning in an easy position to handle.
- Use water pipes compliant with the local and national codes.
- Run the water pump to flush inside of water piping.
  Then, clean the strainer.
- If there is a possibility of freezing, take measures to prevent freezing.
- Connect water piping and heat exchanger via pipe adaptor (accessory) (ISO228-1•G1-1/4B→ANSI-ASME B1.20.1•1-1/4-11.5NPT)
- Tighten securely the connection of water piping and socket with tightening torque of 220 ft·lbf (300 N·m) or less.
  (If a large torque is applied, the unit may be damaged.)

Example:

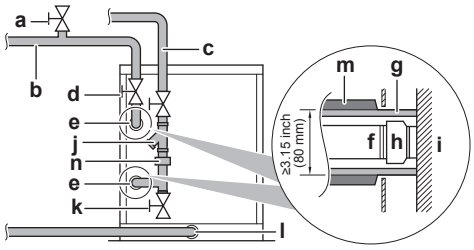

a	Air purge (field supply)
b	Water outlet
c	Water inlet
d	Shut-off valve (field supply)
e	Water connection
f	Water piping (field supply)
g	Insulation (field supply)
h	Pipe adaptor (accessory)
i	Heat exchanger
j	Strainer (accessory)
k	Drain valve (field supply)
l	Drain connection
m	Insulation cover
n	Flow switch (field supply)

4.4.3 Maintenance of plate-type/brazed plate heat exchanger

CAUTION

A brazed plate-type heat exchanger is used for this unit. Because its structure is different from a conventional type heat exchanger, it must be handled in a different manner.

When designing the equipment

1. Install a strainer (standard accessory) at the water inlet side adjacent to the outside unit in order to prevent any foreign materials such as dust, sand, etc. from entering.
2. Depending on the water quality, scale may stick to the plate-type heat exchanger. In order to remove scale, it is necessary to use chemicals to clean it at regular intervals. To this end, install a gate valve in the water piping. Set up a piping connection port on the piping between this gate valve and the outside unit for cleaning by chemicals.
3. For the purpose of cleaning and water drain-off from the outside unit (water draining during a long period of non-use in winter, draining upon starting of season-off), install an "air discharge valve" and a "water draining plug" at the inlet/outlet ports of water piping. In addition, install an "automatic air discharging valve" at the top of riser piping or at the top of a portion where air tends to stay.
4. Independent of the piping inlet of the outside unit, install a cleanable strainer at a portion close to the pump piping inlet.
5. Carry out complete cooling/thermal insulation of water piping and outside dehumidification. If complete cooling or thermal insulation has not been carried out, any damage may be caused during severe winter due to freezing, in addition to thermal loss.
6. When you stop operation during night or winter, it is necessary to take measures to prevent water-related circuits from natural freezing in the area the ambient temperature drops below 32°F (0°C) (by water drain off, keeping the circulation pump running, warming up by a heater, etc.) Freezing of water related circuits may result in any damage to the plate-type heat exchanger. Therefore, take appropriate measures depending on the circumstances of use.

Before starting a test run

1. Before starting a test run, please make sure that the piping work has been carried out in a proper manner. Especially, make sure that the strainer, air discharge valve, automatic water supply valve, expansion tank and cistern are positioned at their places correctly.
2. After water has been completely filled in, first run the pump only, and then make sure that no air has been caught in the water circulation system and that the water flow rate is correct. If any air has been caught or the flow rate is not enough, the plate-type heat exchanger may freeze. Measure any water pressure loss before and after the outside unit and make sure that the flow rate is as designed. In case of any abnormality, stop the test run immediately and carry out trouble shooting to resolve the trouble.
3. Following the installation manual, carry out a test run of the outside unit.
4. After the test run has been completed, inspect the strainer at the inlet piping of the outside unit. Clean it if it is dirty.

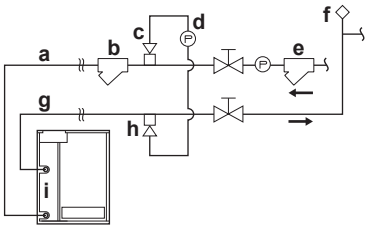

- **a** Water inlet piping
- **b** Strainer (accessory)
- **c** Air discharge valve (for joint use with cleaning port)
- **d** Cleaning device
- **e** Strainer for pump (field supply)
- **f** Automatic air discharge valve
- **g** Water outlet piping
- **h** Joint use with water draining plug
- **i** Plate-type heat exchanger

4.4.4 Variable water flow rate

The RWEQ96~144TA* models are equipped with the logic to operate with a variable water flow rate function.

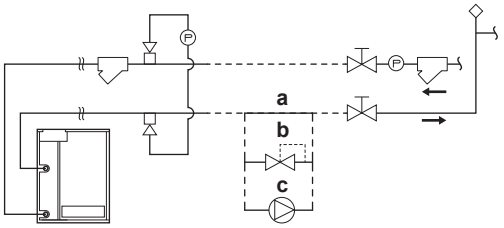

- **a** Constant flow
- **b** Flow regulating valve (field supply)
- **c** Inverter pump (field supply)

A system can either be configured as a constant flow system (a), a variable flow system with valve (b) or a variable flow system with a pump (c).

- Constant flow system (a): the variable water flow rate function is not used.
- A pressure independent flow regulating valve (b): the valve controls the flow rate of a centralized inverter pump through the unit.
- Inverter pump (c): the pump directly controls the water flow rate through the unit.

To activate the variable flow system, change field setting [2-24] to the applicable value. See "7.2 Making field settings" on page 35.

NOTE

Make sure that all field supplied equipment for variable flow rate can be switched off together with the outside unit. This is required when cleaning the plate heat exchanger.

NOTE

- Make sure that all field supplied equipment for variable flow rate meet the minimum hydronic and electric specifications. Failure to do so can result in inefficient operation or even breakdown of the system.
- The outside unit is equipped to deliver variable flow signal to one hydronic pump. Hence it is recommended to install only one hydronic pump per single module of the system.

Size the valve (b) or pump (c) in accordance with the maximum required flow rate A, calculated by the installer of the hydronic system (with respect to the operation range of the outside unit). The typical operation range of the flow rate of the valve/pump is 50% (B) to 100% (A).

The valve/pump input signal is based on a variable 2~9 V DC control output signal coming from the outside unit. The valve or pump should have a linear control characteristic between unit output signal and flow rate according to the example graph below.

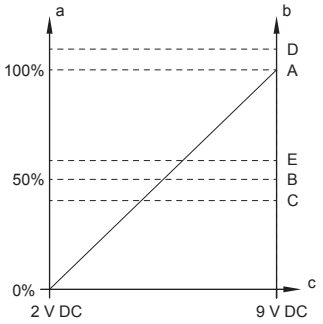

a Valve/pump flow rate
b Unit/system flow rate
c Valve/pump input signal
A Maximum required flow rate (100%)
B 50% of the maximum required flow rate
C Minimum flow rate (see description below)
D Maximum flow rate (see description below)
E Hydronic flow rate

Follow the design criteria below to select the correct valve for the system. The valve system maximum required flow rate **A** is a property of the supplied valve and the 50% flow rate **B** is directly related to the maximum flow rate of the system.

INFORMATION

Some third party valves/pumps have a maximum flow rate defined by the hardware of the system, but a different maximum flow rate can be set to correspond with the maximum input voltage (9 V DC) The installer should ask information to the valve/pump supplier before making the selection.

Design criteria

1 Minimum flow rate **C**:

Model	C
RWEQ96~144	13.2 gpm (50 l/min) 21.2 gpm (80 l/min)[(a)]

(a) For antifreeze use

2 Maximum flow rate **D**:

Model	D
RWEQ96~144	39.6 gpm (150 l/min)

3 Hydronic flow rate **E**:

The value **E** is the design flow rate calculated by the hydronic engineer when designing the building system.

Correct valve selection is done when following conditions are met:

(B≥C) AND (E≤A≤D)

For further selection requirements, refer to "4.5 Field wiring" on page 18.

Check the minimum flow rate of the system during commissioning to ensure good operation.

During the initialization process of the outside unit, the output signal will trigger a flow rate of **B** (50%). The installer should make sure that a flow rate can be checked in the individual hydronic system of each unit. If this value is not matching the required flow, the installer should troubleshoot the hydronic system to solve the problem and ensure the correct flow rate.

4.5 Field wiring

4.5.1 Safety device requirements

The power supply must be protected with the required safety devices, i.e. a main switch, a slow blow fuse on each phase and/or a circuit breaker.

Selection and sizing of the wiring should be done in accordance with the applicable legislation based on the information mentioned in the table below.

Model	Minimum circuit ampacity	Recommended fuses
RWEQ96TAYCU	13.0 A	15 A
RWEQ120TAYCU	16.3 A	20 A
RWEQ144TAYCU	19.9 A	25 A
RWEQ192TAYCU	13.0+13.0 A	15+15 A
RWEQ216TAYCU	13.0+16.3 A	15+20 A
RWEQ240TAYCU	16.3+16.3 A	20+20 A
RWEQ264TAYCU	16.3+19.9 A	20+25 A
RWEQ288TAYCU	19.9+19.9 A	25+25 A
RWEQ312TAYCU	13.0+13.0+16.3 A	15+15+20 A
RWEQ336TAYCU	13.0+16.3+16.3 A	15+20+20 A
RWEQ360TAYCU	16.3+16.3+16.3 A	20+20+20 A
RWEQ384TAYCU	16.3+16.3+19.9 A	20+20+25 A
RWEQ408TAYCU	16.3+19.9+19.9 A	20+25+25 A
RWEQ432TAYCU	19.9+19.9+19.9 A	25+25+25 A

- Phase and frequency: 3 ~ 60 Hz
- Voltage: 575 V (RWEQ96~432TAYCU)
- Transmission line section insulated: AWG 18~16, maximum length is 3280 ft (1000 m). If the total transmission wiring exceeds these limits, it may result in communication error.

NOTE

When using residual current operated circuit breakers, be sure to use a high-speed type 300 mA rated residual operating current.

5 Installation

5.1 Unpacking and placing the unit

5.1.1 To open the outside unit

DANGER: RISK OF ELECTROCUTION

DANGER: RISK OF BURNING

To gain access to the unit, front plates need to be opened as follows:

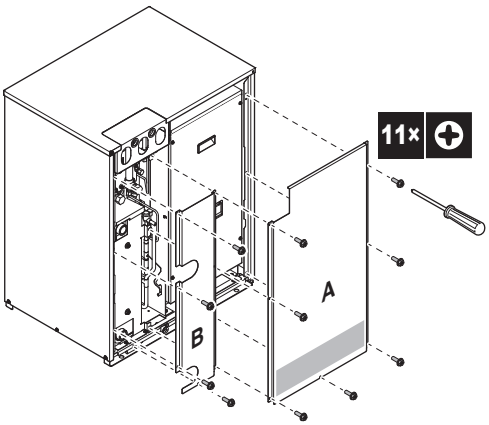

Once the front plate A is open, the control box can be accessed. See "5.1.2 Accessing the control box" on page 19.

For service purposes, the push buttons on the main PCB need to be accessed. To access these push buttons, the control box cover does not need to be opened. See "7.2.3 To access the field setting components" on page 35.

To install the water piping and field wiring, front plate B has to be removed.

5.1.2 Accessing the control box

NOTE

Do not apply excessive force when opening the control box cover. Excessive force can deform the cover, resulting in entering of water to cause equipment failure.

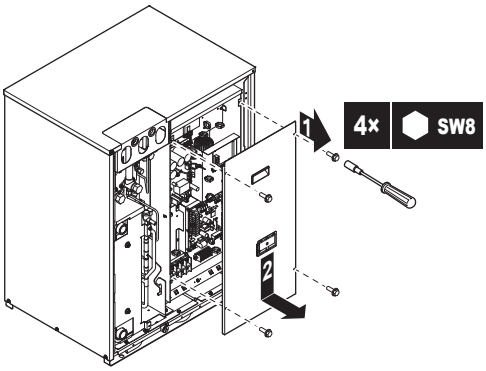

5.2 Mounting the outside unit

5.2.1 To provide the installation structure

Make sure the unit is installed level on a sufficiently strong base to prevent vibration and noise.

NOTE

When the installation height of the unit needs to be increased, do not use stands to only support the corners.

- The preferred installation is on a solid longitudinal foundation (steel beam frame or concrete). The foundation must be larger than the grey marked area.

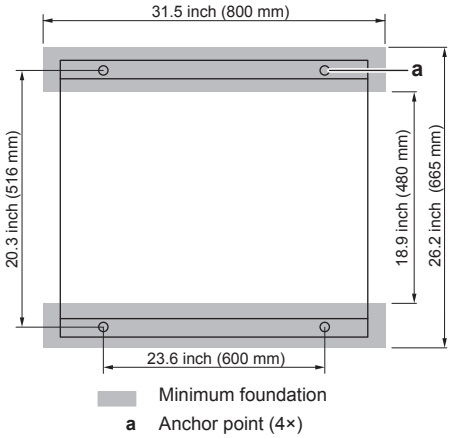

- Secure the unit to its base using foundation bolts. (Use four commercially available 7/16 inch (M12) foundation bolts, nuts, and washers.)
- The foundation bolt should protrude 13/16 inch (20 mm) from the foundation surface.

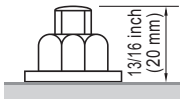

5.3 Refrigerant piping

5.3.1 Precautions when connecting refrigerant piping

NOTE

- All field piping must be installed by licensed refrigeration technician and must comply with applicable local and national codes.
- Make sure the field piping and connections are not subjected to stress.

WARNING

During tests, NEVER pressurize the product with a pressure higher than the maximum allowable pressure (as indicated on the nameplate of the unit).

WARNING

Take sufficient precautions in case of refrigerant leakage. If refrigerant gas leaks, ventilate the area immediately. Possible risks:

- Excessive refrigerant concentrations in a closed room can lead to oxygen deficiency.
- Toxic gas may be produced if refrigerant gas comes into contact with fire.

WARNING

Always recover the refrigerant. Do NOT release them directly into the environment. Use a vacuum pump to evacuate the installation.

NOTE

After all the piping has been connected, make sure there is no gas leak. Use nitrogen to perform a gas leak detection.

5.3.2 Connecting the refrigerant piping

Before connecting the refrigerant piping, make sure the outside and indoor units are mounted.

Connecting the refrigerant piping involves:

- Routing and connecting the refrigerant piping to the outside unit
- Protecting the outside unit against contamination
- Connecting the refrigerant piping to the indoor units (see the installation manual of the indoor units)
- Connecting the multi-connection piping kit
- Connecting the refrigerant branching kit
- Keeping in mind the guidelines for:
  - Brazing
  - Using the stop valves
  - Removing the pinched pipes

5.3.3 Routing refrigerant piping

RWEQ_T* series units offer flexibility of both front and top refrigerant pipe connections.

The units ship from factory configured for refrigerant pipe installation from top. Remove two screws of the pipe service plate (a), and fit the plate with screws in other position as shown in figure below.

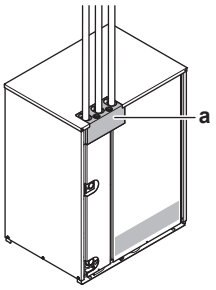

Front connection:

Use the front connection accessory pipes to convert the installation to where refrigerant piping is connected from the front.

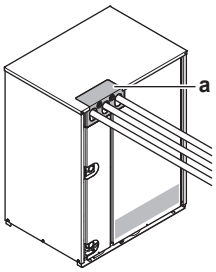

5.3.4 To connect the refrigerant piping to the outside unit

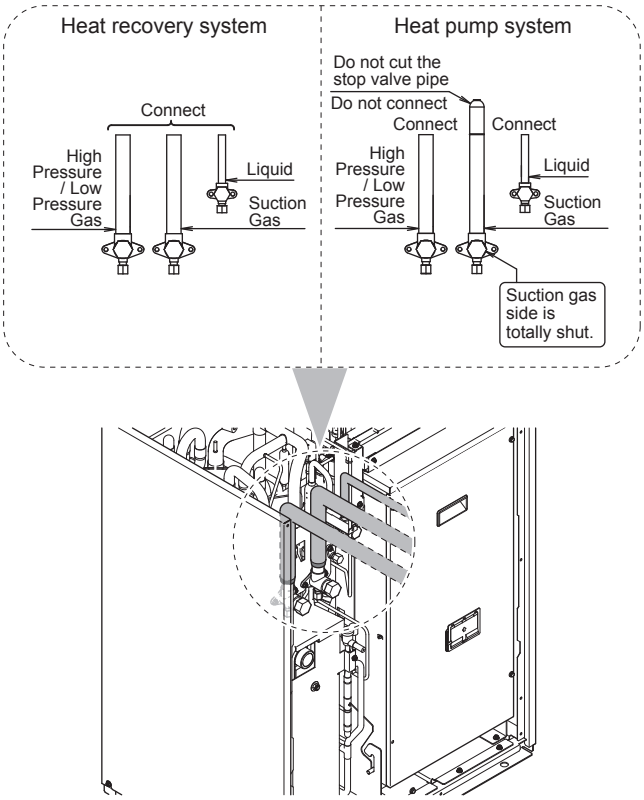

INFORMATION

All local inter unit piping are field supplied except the accessory pipes.

NOTE

Precautions when connecting field piping. Add brazing material as shown in the figure.

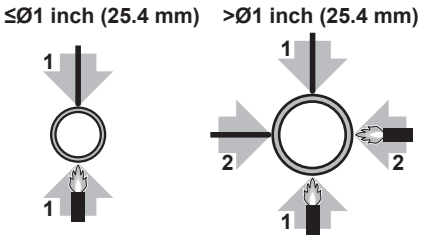

NOTE

- Be sure to use the supplied accessory pipes when carrying out piping work in the field.
- Be sure that the field installed piping does not touch other pipes, the bottom panel or side panel.

Connect the stop valves to the field piping using the accessory pipes supplied with the unit.

The connections to the branch kits are the responsibility of the installer (field piping).

5.3.5 Multi connection piping kit connection

NOTE

Improper installation may lead to malfunction of the outside unit.

- Install the joints horizontally, so that the caution label (a) attached to the joint comes to the top.
  - Do not tilt the joint more than 15° (see view A).
  - Do not install the joint vertically (see view B).

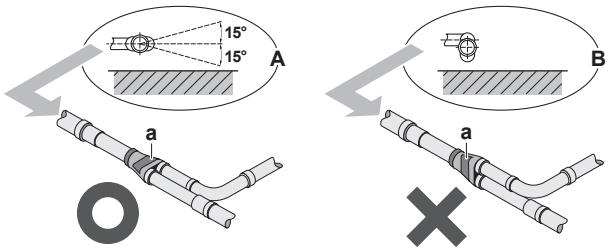

a Caution label
X Not allowed
O Allowed

- Make sure that the total length of the piping connected to the joint is absolute straight for at least 19-11/16 inch (500 mm). Only if a straight field piping of more than 4-3/4 inch (120 mm) is connected, more than 19-11/16 inch (500 mm) of straight section can be ensured.

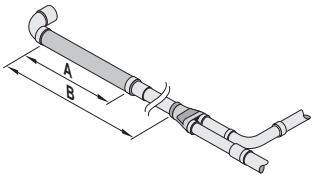

A >4-3/4 inch (120 mm)
B >19-11/16 inch (500 mm)

5.3.6 To connect the refrigerant branching kit

For installation of the refrigerant branching kit, refer to the installation manual delivered with the kit.

- Mount the refnet joint so that it branches either horizontally or vertically.
- Mount the refnet header so that it branches horizontally.

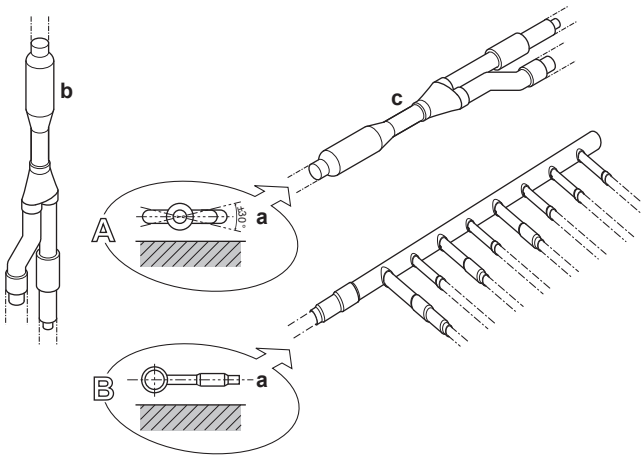

a Horizontal surface
b Refnet joint mounted vertically
c Refnet joint mounted horizontally

5.3.7 Protection against contamination

Protect the piping as described in the following table to prevent dirt, liquid or dust from entering the piping.

Unit	Installation period	Protection method
Outside unit	>1 month	Pinch the pipe
	<1 month	Pinch or tape the pipe
Indoor unit	Regardless of the period	

Seal the piping and wiring intake holes using sealing material (field supply), otherwise the capacity of the unit will drop and small animals may enter the machine.

If the gaps are not properly sealed, sound level will increase and sweat problems can occur.

5.3.8 To braze the pipe end

NOTE

Precautions when connecting field piping. Add brazing material as shown in the figure.

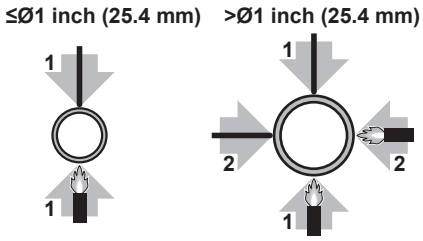

- When brazing, blow through with nitrogen to prevent creation of large quantities of oxidised film on the inside of the piping. This film adversely affects valves and compressors in the refrigerating system and prevents proper operation.
- The Dry Nitrogen pressure should be set to 2.9 psi (0.02 MPa (i.e. just enough so it can be felt on the skin)) with a pressure-reducing valve.

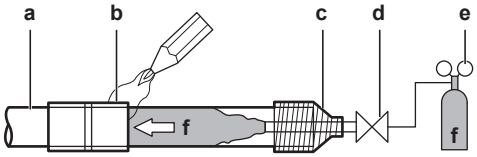

a Refrigerant piping
b Part to be brazed
c Taping
d Manual valve
e Pressure-reducing valve
f Nitrogen

- Do NOT use anti-oxidants when brazing pipe joints. Residue can clog pipes and break equipment.
- Do NOT use flux when brazing copper-to-copper refrigerant piping. Use phosphor copper brazing filler alloy (BCuP), which does not require flux.
  Flux has an extremely harmful influence on refrigerant piping systems. For instance, if chlorine based flux is used, it will cause pipe corrosion or, in particular, if the flux contains fluorine, it will deteriorate the refrigerant oil.

5.3.9 Using the stop valve and service port

To handle the stop valve

- Make sure to keep all stop valves open during operation.
- The figure below shows the name of each part required in handling the stop valve.
- The stop valve is factory closed.

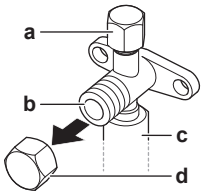

a Service port and service port cover
b Stop valve
c Field piping connection
d Stop valve cover

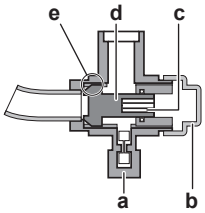

a Service port
b Stop valve cover
c Hexagon hole
d Shaft
e Seal

To open the stop valve

1. Remove the stop valve cover.
2. Insert a hexagon wrench into the stop valve and turn the stop valve counterclockwise.
3. When the stop valve cannot be turned any further, stop turning.

Result: The valve is now open.

To fully open the stop valve with a diameter of Ø3/4 inch to Ø1 inch (Ø19.1 mm to Ø25.4 mm), turn the hexagonal wrench until a torque between 19.9 and 24.3 ft·lbf (27.0 and 33.0 N·m) is achieved.

Inadequate torque may cause leakage of refrigerant and breakage of the stop valve cap.

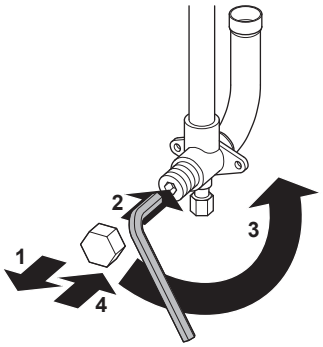

To close the stop valve

1. Remove the stop valve cover.
2. Insert a hexagon wrench into the stop valve and turn the stop valve clockwise.
3. When the stop valve cannot be turned any further, stop turning.

Result: The valve is now closed.

Closing direction:

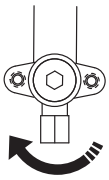

To handle the stop valve cover

- The stop valve cover is sealed where indicated by the arrow. Do NOT damage it.
- After handling the stop valve, tighten the stop valve cover securely, and check for refrigerant leaks. For the tightening torque, refer to the table below.

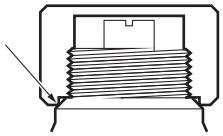

To handle the service port

- Always use a charge hose equipped with a valve depressor pin, since the service port is a Schrader type valve.
- After handling the service port, make sure to tighten the service port cover securely. For the tightening torque, refer to the table below.
- Check for refrigerant leaks after tightening the service port cover.

Tightening torques

Unit: ft·lbf (N·m)

Stop valve size	Tightening torque (turn clockwise to close)			
	Shaft			
	Valve body	Hexagonal wrench	Cap (valve lid)	Service port
Ø3/8 inch (Ø9.5 mm)	3.98~4.87 (5.4~6.6)	5/32 inch (4 mm)	9.95~12.2 (13.5~16.5)	8.48~10.3 (11.5~13.9)
Ø1/2 inch (Ø12.7 mm)	5.97~7.30 (8.1~9.9)		13.3~16.2 (18.0~22.0)	
Ø5/8 inch (Ø15.9 mm)	9.95~12.2 (13.5~16.5)	1/4 inch (6 mm)	17.0~19.9 (23.1~27.0)	
Ø3/4 inch (Ø19.1 mm)	19.9~24.3 (27.0~33.0)	5/16 inch (8 mm)	16.6~20.3 (22.5~27.5)	
Ø1 inch (Ø25.4 mm)				

5.3.10 To remove the pinched pipes

NOTE

In case of heat pump mode, do NOT remove the pinched pipe of the gas line stop valve.

WARNING

Any gas or oil remaining inside the stop valve may blow off the pinched piping.

Failure to observe the instructions in procedure below properly may result in property damage or personal injury, which may be serious depending on the circumstances.

Use the following procedure to remove the pinched piping:

1 Remove the valve cover and make sure that the stop valves are fully closed.

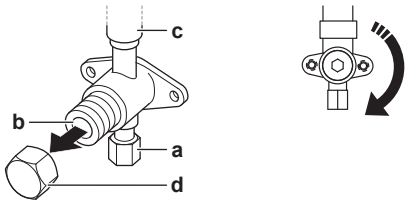

- **a** Service port and service port cover
- **b** Stop valve
- **c** Field piping connection
- **d** Stop valve cover

2 Connect the vacuuming/recovery unit through a manifold to the service port of all stop valves.

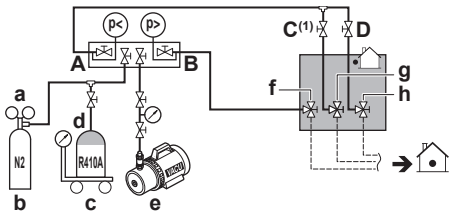

- **a** Pressure reducing valve
- **b** Nitrogen
- **c** Measuring instrument
- **d** Refrigerant R410A tank (siphon system)
- **e** Vacuum pump
- **f** Liquid line stop valve
- **g** Gas line stop valve
- **h** High pressure/low pressure gas line stop valve
- **A** Valve A
- **B** Valve B
- **C** Valve C(1)
- **D** Valve D

(1) Only for heat recovery mode.

NOTE

Do not connect the vacuum pump to the suction gas stop valve if the unit is intended to run in heat pump mode. This will increase the risk of unit failure.

3 Recover gas and oil from the pinched piping by using a recovery unit.

CAUTION

Do not vent gases into the atmosphere.

4 When all gas and oil is recovered from the pinched piping, disconnect the charge hose and close the service ports

5 Cut off the upper part of the liquid, gas, and high pressure/low pressure gas stop valve pipes along the black line. Use an appropriate tool (e.g. a pipe cutter, a pair of nippers).

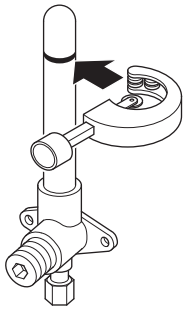

WARNING

Never remove the pinched piping by brazing.

Any gas or oil remaining inside the stop valve may blow off the pinched piping.

6 Make sure that no particles remain in the pipe. Blow out any particles with compressed air.

5.4 Checking the refrigerant piping

5.4.1 About checking the refrigerant piping

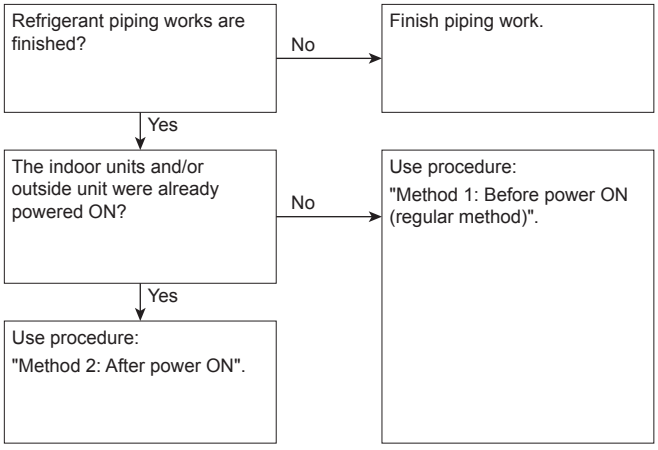

It is very important that all refrigerant piping work is done before the units (outside or indoor) are powered on.

When the units are powered on, the expansion valves will initialize. This means that they will close. Leak test and vacuum drying of field piping and indoor units is impossible when this happens.

Therefore, there will be explained 2 methods for initial installation, leak test and vacuum drying.

Method 1: Before power ON

If the system has not yet been powered on, no special action is required to perform the leak test and the vacuum drying.

Method 2: After power ON

If the system has already been powered on, activate setting [2-21] (refer to "7.2.4 To access mode 1 or 2" on page 35). This setting will open field expansion valves to guarantee a R410A piping pathway and make it possible to perform the leak test and the vacuum drying.

NOTE

Make sure that all indoor units connected to the outside unit are powered on.

NOTE

Wait until the outside unit has finished the initialization to apply setting [2-21].

Leak test and vacuum drying

Checking the refrigerant piping involves:

- Checking for any leakages in the refrigerant piping.
- Performing vacuum drying to remove all moisture, air or nitrogen in the refrigerant piping.

If there is a possibility of moisture being present in the refrigerant piping (for example, water may have entered the piping), first carry out the vacuum drying procedure below until all moisture has been removed.

All piping inside the unit has been factory tested for leaks.

Only field installed refrigerant piping needs to be checked. Therefore, make sure that all the outside unit stop valves are firmly closed before performing leak test or vacuum drying.

NOTE

Make sure that all (field supplied) field piping valves are OPEN (not outside unit stop valves!) before you start leak test and vacuuming.

For more information on the state of the valves, refer to "5.4.3 Checking refrigerant piping: Setup" on page 24.

5.4.2 Checking refrigerant piping: General guidelines

Connect the vacuum pump through a manifold to the service port of all stop valves to increase efficiency (refer to "5.4.3 Checking refrigerant piping: Setup" on page 24).

NOTE

Use a 2-stage vacuum pump with a non-return valve or a solenoid valve that can evacuate to 500 microns or less.

NOTE

Make sure the pump oil does not flow oppositely into the system while the pump is not working.

NOTE

Do not purge the air with refrigerants. Use a vacuum pump to evacuate the installation.

5.4.3 Checking refrigerant piping: Setup

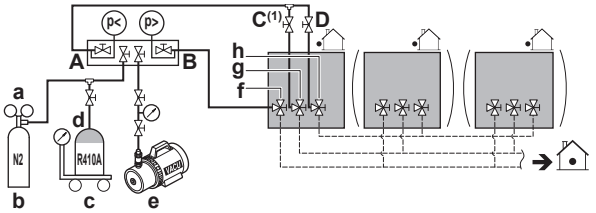

a	Pressure reducing valve
b	Nitrogen
c	Weighing scales
d	Refrigerant R410A tank (siphon system)
e	Vacuum pump
f	Liquid line stop valve
g	Gas line stop valve
h	High pressure/low pressure gas line stop valve
A	Valve A
B	Valve B
C	Valve C(1)
D	Valve D

(1) Only for heat recovery mode.

NOTE

Do not connect the vacuum pump to the suction gas stop valve if the unit is intended to run in heat pump mode. This will increase the risk of unit failure.

Valve	State of valve
Valve A	Open
Valve B	Open
Valve C	Open
Valve D	Open
Liquid line stop valve	Close
Gas line stop valve	Close
High pressure/low pressure gas line stop valve	Close

NOTE

The connections to the indoor units and all indoor units should also be leak and vacuum tested. Keep any possible (field supplied) field piping valves open as well.

Refer to the indoor unit installation manual for more details. Leak test and vacuum drying should be done before the power supply is set to the unit. If not, see also the flow chart earlier described in this chapter (see "5.4.1 About checking the refrigerant piping" on page 23).

5.4.4 Air tight test and vacuum drying

- After finished piping work, carry out air tight test and vacuum drying.

NOTE

- Always use nitrogen gas for the air tightness test.
- Absolutely do not open the stop valve until the main power circuit insulation measurement has been completed. (Measuring after the stop valve is opened will cause the insulation value to drop.)

<Needed tools>

Gauge manifold Charge hose valve	▪ To prevent entry of any impurities and insure sufficient pressure resistance, always use the special tools dedicated for R410A. ▪ Use charge hose that have pushing stick for connecting to service port of stop valves or refrigerant charge port.
Vacuum pump	▪ The vacuum pump for vacuum drying should be able to lower the pressure to 500 microns. ▪ Take care the pump oil never flow backward into the refrigerant pipe during the pump stops.

NOTE

- The air-tightness test and vacuum drying should be done using the service ports of suction gas pipe, high/low pressure gas pipe and liquid pipe stop valve. See the [R410A] Label attached to the front panel of the outside unit for details on the location of the service port.
- See "5.6.4 To charge refrigerant" on page 28 for details on handling the stop valve.
- The refrigerant charge port is connected to unit pipe. When shipped, the unit contains the refrigerant, so use caution when attaching the charge hose.

<Air tight test>

Pressurize the suction gas pipe, high/low pressure gas pipe and liquid pipe from the service ports of each stop valve to 550 psi (3.8 MPa) (do not pressurize more than 550 psi (3.8 MPa)). If the pressure does not drop within 24 hours, the system passes the test. If there is a pressure drop, check for leaks, make repairs and perform the air tight test again.

<Vacuum drying>

Evacuate the system from the suction gas pipe, high/low pressure gas pipe and liquid pipe stop valve service ports by using a vacuum pump for more than 2 hours and bring the system to 500 microns or less. After keeping the system under that condition for more than 1 hour, check if the vacuum gauge rises or not. If it rises, the system may either contain moisture inside or have leaks.

NOTE

During the rainy season, moisture might enter the piping. If working during a rainy season and the work takes long enough for condensation to form inside the pipes, take the following precautions:

After evacuating the system for 2 hours, pressurize the system to 7 psi (50 kPa) (vacuum break) with nitrogen gas and evacuate the system again using the vacuum pump for 1 hour to 500 microns or less (vacuum drying).

If the system cannot be evacuated to 500 microns within 2 hours, repeat the operation of vacuum break and vacuum drying.

Then, after leaving the system in a vacuum for 1 hour, confirm that the vacuum gauge does not rise.

5.5 To insulate the refrigerant piping

After finishing the leak test and vacuum drying, the piping must be insulated. Take into account the following points:

- Make sure to insulate the connection piping and refrigerant branch kits entirely.
- Always insulate the suction gas pipe, high/low pressure gas pipe, liquid pipe and pipe connections.
- Use heat resistant polyethylene foam which can withstand a temperature of 158°F (70°C) for liquid piping and polyethylene foam which can withstand a temperature of 248°F (120°C) for gas piping.
- Reinforce the insulation on the refrigerant piping according to the installation environment.

Ambient temperature	Humidity	Minimum thickness
≤86°F (30°C)	75% to 80% RH	0.6 inch (15 mm)
>86°F (30°C)	≥80% RH	0.79 inch (20 mm)

Condensation might form on the surface of the insulation.

- If there is a possibility that condensation on the stop valve might drip down into the indoor unit through gaps in the insulation and piping because the outside unit is located higher than the indoor unit, this must be prevented by sealing up the connections. See below figure.

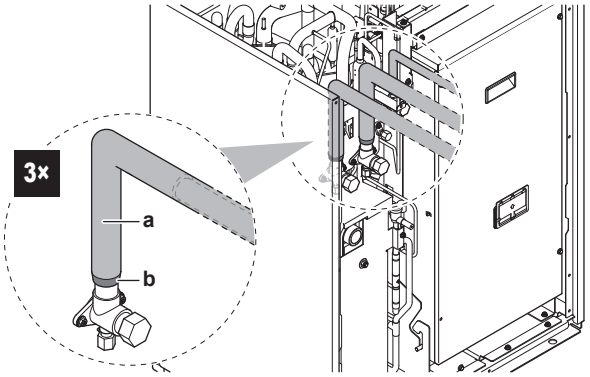

a Insulation material
b Caulking etc.

5.6 Charging refrigerant

5.6.1 Precautions when charging refrigerant

WARNING

- Only use R410A as refrigerant. Other substances may cause explosions and accidents.
- R410A contains fluorinated greenhouse gases. Its global warming potential (GWP) value is 2090. Do NOT vent these gases into the atmosphere.
- When charging refrigerant, always use protective gloves and safety glasses.

NOTE

If the power of some units is turned off, the charging procedure cannot be finished properly.

NOTE

In case of a multiple module system, turn on the power of all outside units.

NOTE

Be sure to turn on the power 6 hours before operation in order to have power running to the crankcase heater and to protect the compressor.

NOTE

If operation is performed within 12 minutes after the indoor and outside units are turned on, the compressor will not operate before the communication is established in a correct way between outside unit(s) and indoor units.

NOTE

Before starting charging procedures, check if the 7-segment display indication of the outside unit A1P PCB is as normal (see "7.2.4 To access mode 1 or 2" on page 35). If a malfunction code is present, see "10.2 Solving problems based on error codes" on page 45.

NOTE

Close the front panel before any refrigerant charge operation is executed. Without the front panel attached the unit cannot judge correctly whether it is operating properly or not.

5.6.2 Charging refrigerant

The outside unit is factory charged with refrigerant, but depending on the field piping you have to charge additional refrigerant.

Make sure the outside unit's external refrigerant piping is checked (leak test, vacuum drying).

Charging additional refrigerant typically consists of the following stages:

1 Determining how much you have to charge additionally.
2 Charging additional refrigerant (pre-charging and/or charging).

5.6.3 To determine the additional refrigerant amount

NOTE

The refrigerant charge of the system must be less than 210 lbs (100 kg). This means that in case the calculated total refrigerant charge is equal to or more than 209 lbs (95 kg) you must divide your multiple module system into smaller independent systems, each containing less than 209 lbs (95 kg) refrigerant charge. For factory charge, refer to the unit name plate.

In case of heat pump mode

Formula:

$R=[(X_1\times\mathbf{Ø7/8})\times0.249+(X_2\times\mathbf{Ø3/4})\times0.175+(X_3\times\mathbf{Ø5/8})\times0.121+(X_4\times\mathbf{Ø1/2})\times0.081+(X_5\times\mathbf{Ø3/8})\times0.040+(X_6\times\mathbf{Ø1/4})\times0.015]+[B]$

- **R** Additional refrigerant to be charged [in lbs and rounded off to 1 decimal place]
- **$X_{1...6}$** Total length [ft] of liquid piping size at **Øa**
- **B** Parameter [B]
- **C** Parameter [C]

* In units of 0.1 kg, additional refrigerant to be charged=R (kg).
$R=[(X1\times\mathbf{\Phi22.2})\times0.37+(X2\times\mathbf{\Phi19.1})\times0.26+(X3\times\mathbf{\Phi15.9})\times0.18+(X4\times\mathbf{\Phi12.7})\times0.12+(X5\times\mathbf{\Phi9.5})\times0.059+(X6\times\mathbf{\Phi6.4})\times0.022]+[B]$

In case of heat recovery mode

Formula:

$R=[(X_1\times\mathbf{Ø7/8})\times0.249+(X_2\times\mathbf{Ø3/4})\times0.175+(X_3\times\mathbf{Ø5/8})\times0.121+(X_4\times\mathbf{Ø1/2})\times0.081+(X_5\times\mathbf{Ø3/8})\times0.040+(X_6\times\mathbf{Ø1/4})\times0.015]\times1.04+[A]+[B]$

- **R** Additional refrigerant to be charged [in lbs and rounded off to 1 decimal place]
- **$X_{1...6}$** Total length [ft] of liquid piping size at **Øa**
- **A** Parameter [A]
- **B** Parameter [B]
- **C** Parameter [C]

* In units of 0.1 kg, additional refrigerant to be charged=R (kg).
$R=[(X1\times\Phi22.2)\times0.37+(X2\times\Phi19.1)\times0.26+(X3\times\Phi15.9)\times0.18+(X4\times\Phi12.7)\times0.12+(X5\times\Phi9.5)\times0.059+(X6\times\Phi6.4)\times0.022]\times1.04+[A]+[B]$

Parameter A. When using more than one multi branch selector unit, add the sum of the individual branch selector unit charge factors.

Model	Parameter [A]
BSQ36T	0.1 lbs/unit (0.05 kg/unit)
BSQ60T	0.2 lbs/unit (0.1 kg/unit)
BSQ96T	0.4 lbs/unit (0.2 kg/unit)
BS4Q54T	0.7 lbs/unit (0.3 kg/unit)
BS6Q54T	0.9 lbs/unit (0.4 kg/unit)
BS8Q54T	1.2 lbs/unit (0.5 kg/unit)
BS10Q54T	1.6 lbs/unit (0.7 kg/unit)
BS12Q54T	1.8 lbs/unit (0.8 kg/unit)

Parameter B. If the total indoor unit capacity connection ratio>85%, charge an additional refrigerant.

Field piping length	Parameter [B]			
	Total indoor unit capacity connection ratio	Refrigerant amount Total outside unit capacity type		
		RWEQ72-144T type	RWEQ168-288T type	RWEQ312-432T type
<295.3 ft (90 m)	≤85%	0.0		
	>85%	The smaller of [C] or 5.51 lbs. (2.5 kg)	The smaller of [C] or 6.61 lbs. (3.0 kg)	The smaller of [C] or 7.50 lbs. (3.4 kg)
≥295.3 ft (90 m)	≤85%	0.0		
	>85%	2.20 lbs. (1.0 kg)		

INFORMATION

Piping length is considered by the distance from the outside unit to the farthest indoor unit.

Parameter [C]										
Indoor unit capacity type	FXMQ type									
	07	09	12	15	18	24	30	36	48	54
Refrigerant amount (lbs. (kg)/unit)	0.06 (0.03)	0.03 (0.014)	0.14 (0.06)	0.29 (0.13)	0.25 (0.11)	0.16 (0.07)	0.33 (0.15)	0.25 (0.11)	0.08 (0.04)	0.00 (0.00)
Indoor unit capacity type	FXFQ type									Others
	07	09	12	15	18	24	30	36	48	
Refrigerant amount (lbs. (kg)/unit)	0.36 (0.16)	0.33 (0.15)	0.30 (0.14)	0.26 (0.12)	0.61 (0.28)	0.53 (0.24)	0.61 (0.28)	0.53 (0.24)	0.36 (0.16)	0.00 (0.00)

Connection ratio requirements. When selecting indoor units, the connection ratio must comply with the requirements shown in "3.5.2 Connection Ratio" on page 8. For more information, see the technical engineering data.

Example of refrigerant piping (8 indoor units are connected)

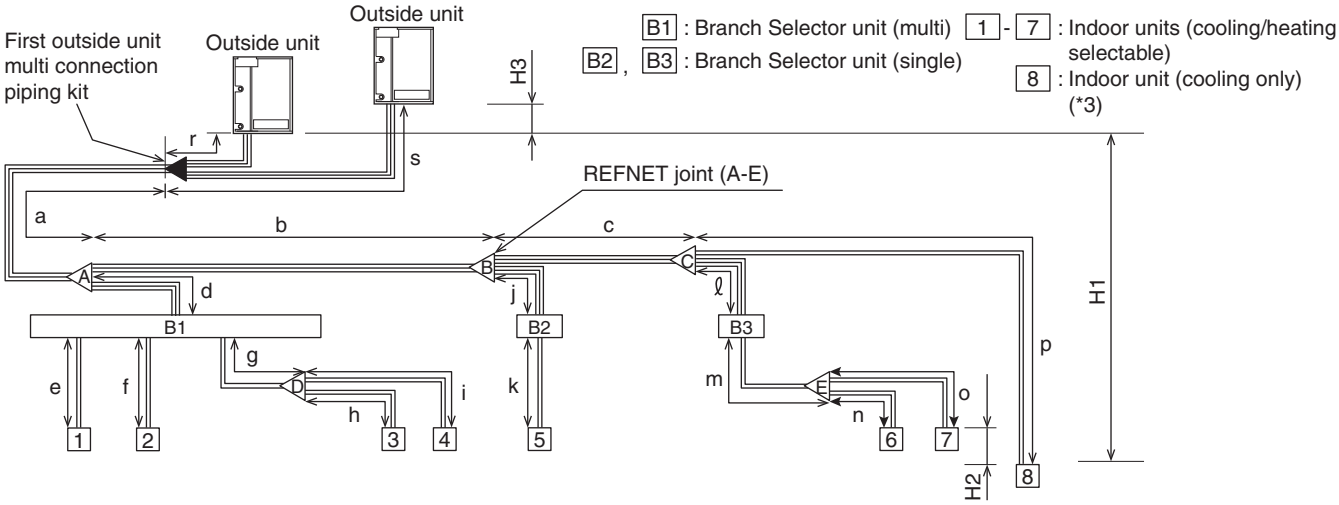

Example for refrigerant branch using REFNET joint and REFNET header for systems and each pipe length as shown below.

Outside system: RWEQ264TAYCU (RWEQ144TAYCU+RWEQ120TAYCU)

Total length of liquid piping: 285 ft

Total capacity of indoor unit: 104.5%

(Branch Selector units
BS4Q54T×1, BSQ60T×1, BSQ96T×1
Indoor units
FXMQ type: 18×1, 24×2, 36×1, 54×1
FXFQ type: 36×2
Other: 48×1)

Liquid piping

a: Ø3/4 × 60 ft	e: Ø1/4 × 15 ft	i: Ø3/8 × 20 ft	m: Ø3/8 × 15 ft	r: Ø1/2 × 10 ft
b: Ø5/8 × 20 ft	f: Ø3/8 × 10 ft	j: Ø3/8 × 10 ft	n: Ø3/8 × 15 ft	s: Ø1/2 × 15 ft
c: Ø1/2 × 10 ft	g: Ø3/8 × 10 ft	k: Ø3/8 × 10 ft	o: Ø3/8 × 10 ft	
d: Ø3/8 × 15 ft	h: Ø3/8 × 15 ft	ℓ: Ø3/8 × 15 ft	p: Ø3/8 × 10 ft	

[A]= 0.7×1 + 0.2×1 + 0.4×1 = 1.3 lbs.

BS4Q54T×1 BSQ60T×1 BSQ96T×1

[C]= 0.25×1 + 0.16×2 + 0.25×1 + 0.00×1 + 0.53×2 + 0.00×1 = 1.88 lbs.

FXMQ18×1 FXMQ24×2 FXMQ36×1 FXMQ54×1 FXFQ36×2 Other48×1

[B]= Min (6.61 lbs., 1.88 lbs.) = 1.88 lbs.

R= (60×0.175 + 20×0.121 + 35×0.081 + 155×0.040 + 15×0.015) × 1.04 + 1.3 + 1.88

a b c, r, s d, f, g, h, i, j, k, ℓ, m, n, o, p e [A] [B]

= 26.247 ⇒ 26.2 lbs.

Round off in units of 0.1 lbs.

INFORMATION

Piping length is considered by the distance from the outside unit to the farthest indoor unit.

5.6.4 To charge refrigerant

Follow the steps as described below.

Pre-charging refrigerant

1 Calculate the additional amount of refrigerant to be added using the formula mentioned in "5.6.3 To determine the additional refrigerant amount" on page 26.

2 The first 22 lbs (10 kg) of additional refrigerant can be pre-charged without outside unit operation:

If	Then
The additional refrigerant amount is smaller than 22 lbs (10 kg)	Perform steps 3~4.
The additional refrigerant charge is larger than 22 lbs (10 kg)	Perform steps 3~6.

3 Pre-charging can be done without compressor operation, by connecting the refrigerant bottle to the service port of the liquid stop valve (open valve B). Make sure that all outside unit stop valves, as well as valves A, C, and D are closed.

NOTE

During pre-charging, the refrigerant is charged through the liquid line only. Close valves C, D, and A and disconnect the manifold from the gas line and the high pressure/low pressure gas line.

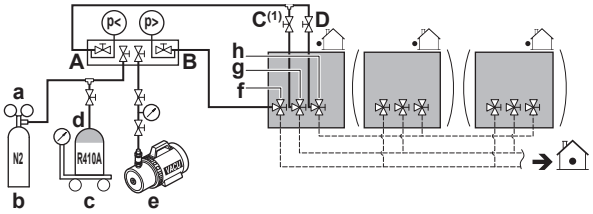

- **a** Pressure reducing valve
- **b** Nitrogen
- **c** Weighing scales
- **d** Refrigerant R410A tank (siphon system)
- **e** Vacuum pump
- **f** Liquid line stop valve
- **g** Gas line stop valve
- **h** High pressure/low pressure gas line stop valve
- **A** Valve A
- **B** Valve B
- **C** Valve C(1)
- **D** Valve D

(1) Only for heat recovery mode.

NOTE

Do not connect the vacuum pump to the suction gas stop valve if the unit is intended to run in heat pump mode. This will increase the risk of unit failure.

4 Do one of the following:

	If	Then
4a	The calculated additional refrigerant amount is reached by above pre-charging procedure	Close valve B and disconnect the manifold from the liquid line.
4b	The total amount of refrigerant could not be charged by pre-charging	Close valve B, disconnect the manifold from the liquid line, and perform steps 5~6.

INFORMATION

If the total additional refrigerant amount was reached in step 4 (by pre-charging only), record the amount of refrigerant that was added on the additional refrigerant charge label provided with the unit and attach it on the back side of the front panel.

Perform the test procedure as described in "8 Commissioning" on page 41.

Charging refrigerant

5 After pre-charging, connect valve A to the refrigerant charge port and charge the remaining additional refrigerant through this port. Open all outside unit stop valves. At this point, valve A must remain closed!

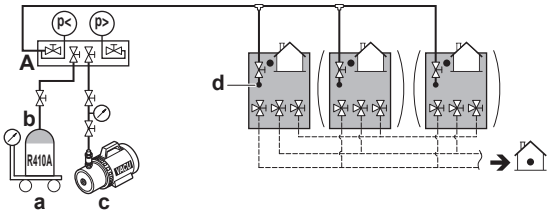

- **a** Weighing scales
- **b** Refrigerant R410A tank (siphon system)
- **c** Vacuum pump
- **d** Refrigerant charge port
- **A** Valve A

INFORMATION

For a multi outside unit system, it is not required to connect all charge ports to a refrigerant tank.

The refrigerant will be charged with ±48.6 lbs (22 kg) in 1 hour time at an outside temperature of 86°FDB (30°CDB) or with ±13.3 lbs (6 kg) at an outside temperature of 32°FDB (0°CDB).

If you need to speed up in case of a multiple module system, connect the refrigerant tanks to each outside unit.

NOTE

- The refrigerant charging port is connected to the piping inside the unit. The unit's internal piping is already factory charged with refrigerant, so be careful when connecting the charge hose.
- After adding the refrigerant, do not forget to close the lid of the refrigerant charging port. The tightening torque for the lid is 8.48 to 10.25 ft·lbf (11.5 to 13.9 N·m).
- In order to ensure uniform refrigerant distribution, it may take the compressor ±10 minutes to start up after the unit has started operation. This is not a malfunction.

The remaining additional refrigerant charge can be charged by operating the outside unit by means of the manual refrigerant charge operation mode:

6 Take all the precautions mentioned in "7 Configuration" on page 35 and "8 Commissioning" on page 41 into account.

7 Turn on the power of the indoor units and outside unit.

8 Activate outside unit setting [2-20]=1 to start manual refrigerant charge mode. Refer to "7.2.8 Mode 2: Field settings" on page 37 for details.

Result: The unit will start operation.

9 Valve A can be opened. Charging of remaining additional refrigerant can be done.

10 When the remaining calculated additional refrigerant amount is added, close valve A and push BS3 to stop the manual refrigerant charging procedure.

INFORMATION

The manual refrigerant charge operation will automatically stop within 30 minutes. If charging is not completed after 30 minutes, perform the additional refrigerant charging operation again.

11 Perform the test procedure as described in "8 Commissioning" on page 41.

INFORMATION

After charging refrigerant:

- Record the additional refrigerant amount on the refrigerant label provided with the unit and attach it to the backside of the front panel.
- Perform the test procedure described in "8 Commissioning" on page 41.

INFORMATION

Aborting the manual refrigerant charge is possible by pushing BS3. The unit will stop and return to idle condition.

5.6.5 Final charge adjustment

It is not necessary to do this final adjustment normally, but perform the following operation only when if the most adequate refrigerant for the best performance is required.

Run the system for 30 minutes in cooling to allow pressures to stabilize, then check subcooling as detailed in the following sections.

Subcooling = Condensing_temp.(TC) – (Heat exchanger liquid pipe)

Check subcooling for each outside unit by DAIKIN specified checker and calculate the average subcooling of the outside unit using weighted average method. (shown below)
To display the specific temperature in the unit, refer to the instructions in the manual that comes with the kit.

Average subcooling = ((C1) x (S1) + (C2) x (S2) + (C3) x (S3)) / (CT)
C1 = O-1 Capacity index (Outside Unit 1)
S1 = O-1 Subcooling (Outside Unit 1)
C2 = O-2 Capacity index (Outside Unit 2)
S2 = O-2 Subcooling (Outside Unit 2)
C3 = O-3 Capacity index (Outside Unit 3)
S3 = O-3 Subcooling (Outside Unit 3)
CT = Total Capacity index of Outside unit

Systems should have a subcooling of following table.

Unit: °F (°C)

Capacity index	96	120	144	192	216	240	264
Average subcooling	4.9 (2.7)	7.2 (4.0)	9.9 (5.5)	4.9 (2.7)	6.1 (3.4)	7.2 (4.0)	8.6 (4.8)

Capacity index	288	312	336	360	384	408	432
Average subcooling	9.9 (5.5)	7.6 (4.2)	6.5 (3.6)	7.2 (4.0)	8.3 (4.6)	9.2 (5.1)	9.9 (5.5)

a. If average subcooling is low, add charge to raise subcooling to (Average subcooling)±1.8°F (1°C).
(The maximum additional charge is 4.4 lbs/unit. (2kg/unit))
b. If average subcooling is high, remove charge to lower the subcooling to (Average subcooling)±1.8°F (1°C).

5.6.6 Checks after charging refrigerant

- Are all stop valves open?
- Is the amount of refrigerant, that has been added, recorded on the refrigerant charge label?

NOTE

Make sure to open all stop valves after (pre-) charging the refrigerant.

Operating with the stop valves closed will damage the compressor.

5.7 Connecting the water piping

5.7.1 About connecting the water piping

Before connecting the water piping

Make sure the outside and indoor units are mounted.

Typical workflow

Connecting the water piping typically consists of the following stages:

1 Connecting the water piping of the outside unit.
2 Filling the water circuit.
3 Insulating the water piping.

5.7.2 Precautions when connecting the water piping

INFORMATION

Also read the precautions and requirements in the following chapters:

- General safety precautions
- Preparation

5.7.3 To connect the water piping

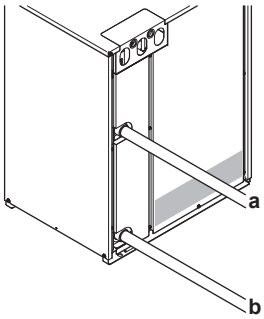

a Condenser water outlet
b Condenser water inlet

Consult "4.4.2 Water circuit requirements" on page 16 for the correct tightening torque of the water piping connections.

5.7.4 To fill the water circuit

1 Connect the water supply hose to the fill valve (field supply).

2 Open the fill valve.

3 Run the pump ONLY and make sure that no air has been caught in the water circulation system otherwise the plate heat exchanger will freeze.

4 Check if the water flow rate is correct, otherwise the plate heat exchanger will freeze. Measure any water pressure loss before and after running the pump and make sure that the flow rate is correct. If not, stop the pump immediately and carry out troubleshooting.

5.7.5 To insulate the water piping

The outside water piping MUST be insulated to prevent condensation during cooling operation and reduction of the heating and cooling capacity.

See "4.4.2 Water circuit requirements" on page 16 for more information.

5.8 Connecting the electrical wiring

5.8.1 Precautions when connecting electrical wiring

DANGER: RISK OF ELECTROCUTION

WARNING

All field wiring and components must be installed by a licensed electrician and must comply with the applicable local and national codes.

WARNING

If NOT factory installed, a main switch or other means for disconnection, having a contact separation in all poles providing full disconnection under overvoltage category III condition, MUST be installed in the fixed wiring.

WARNING

- Use copper wires only.
- Make sure the field wiring complies with the applicable local and national codes.
- All field wiring must be performed in accordance with the wiring diagram supplied with the product.
- NEVER squeeze bundled cables and make sure they do not come in contact with the piping and sharp edges. Make sure no external pressure is applied to the terminal connections.
- Make sure to install ground wiring. Do NOT ground the unit to a utility pipe, surge absorber, or telephone ground. Incomplete ground may cause electrical shock.
- Make sure to use a dedicated power circuit. NEVER use a power supply shared by another appliance.
- Make sure to install the required fuses or circuit breakers.

Install power cables at least 10 ft (3 m) away from televisions or radios to prevent interference. Depending on the radio waves, a distance of 10 ft (3 m) may not be sufficient.

WARNING

- After finishing the electrical work, confirm that each electrical component and terminal inside the electrical components box is connected securely.
- Make sure all covers are closed before starting up the unit.

NOTE

Do NOT operate the unit until the refrigerant piping is complete. Running the unit before the piping is ready will break the compressor.

NOTE

Only proceed with wiring work after blocking off all power.

NOTE

This machine includes an inverter device. Connect ground and leave charge to eliminate the impact on other devices by reducing noise generated from the inverter device and to prevent leaked current from being charged in the outer shell of the product.

NOTE

Never connect the power supply in reverse-phase.

NOTE

Do NOT install a phase advancing capacitor, because this unit is equipped with an inverter. A phase advancing capacitor will reduce performance and may cause accidents.

NOTE

NEVER remove a thermistor, sensor, etc., when connecting power wiring and transmission wiring. (If operated without thermistor, sensor, etc., the compressor may break down.)

5.8.2 Field wiring: Overview

In case of heat recovery mode

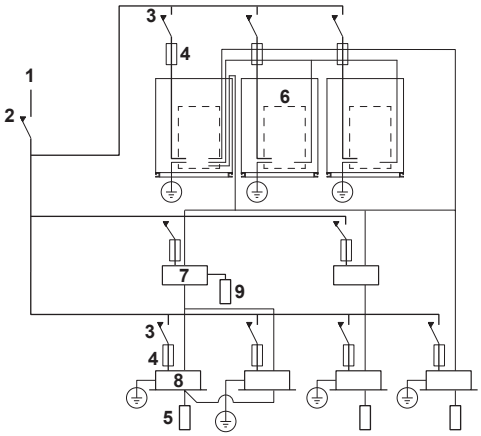

1 Field power supply
2 Main switch
3 Ground leak detector
4 Fuse or circuit breaker
5 Remote controller
6 Outside unit
7 Branch selector unit
8 Indoor unit
9 Cool/heat selector
—— Power supply wiring
—— Transmission wiring

In case of heat pump mode

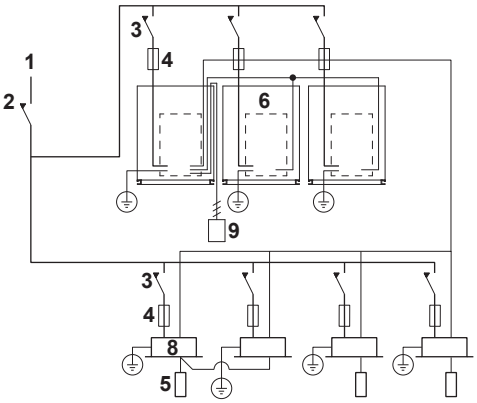

1 Field power supply
2 Main switch
3 Ground leak detector
4 Fuse or circuit breaker
5 Remote controller
6 Outside unit
7 Branch selector unit
8 Indoor unit
9 Cool/heat selector
—— Power supply wiring
—— Transmission wiring

These images are intended as examples only. Please follow local and national electrical code.

5.8.3 About the electrical wiring

It is important to keep the power supply and the transmission wiring separated from each other. In order to avoid any electrical interference the distance between both wiring should always be at least 1 inch (25.4 mm).

NOTE

- Be sure to keep the power line and transmission line apart from each other. Transmission wiring and power supply wiring may cross, but may not run parallel.
- Transmission wiring and power supply wiring may not touch internal piping (except the inverter PCB cooling pipe) in order to avoid wire damage due to high temperature piping.
- Firmly close the lid and arrange the electrical wires so as to prevent the lid or other parts from coming loose.

The transmission wiring outside the unit should be routed in conduit.

Be sure to follow the limits below. If the unit-to-unit cables are beyond these limits, it may result in malfunction of transmission:

Description	Limitation
Maximum wiring length	3280 ft (1000 m)
Total wiring length	6560 ft (2000 m)
Maximum inter unit wiring length between outside units	98 ft (30 m)
Transmission wiring to cool/heat selector	1640 ft (500 m)
Maximum number of branches for unit-to-unit cabling[(a)]	16
Maximum number of independent interconnectable systems	10

(a) No branching is allowed after branching (see figure below).

In case of heat recovery mode

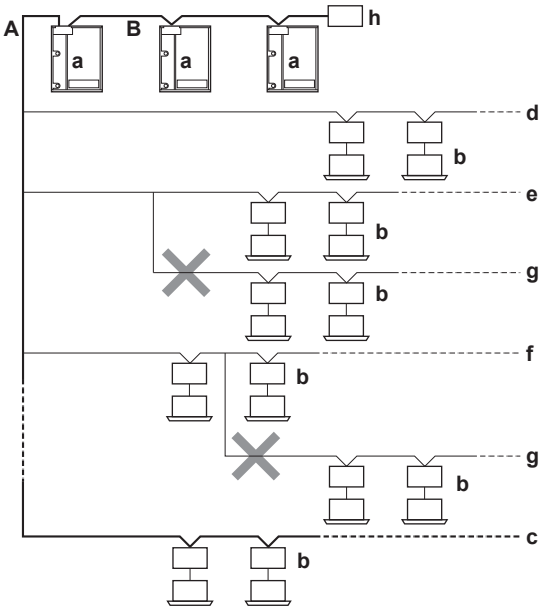

a Outside unit
b Indoor unit + Branch selector units
c Main line
d Branch line 1
e Branch line 2
f Branch line 3
g No branch is allowed after branch
h Central user interface (etc...)
A Outside/indoor transmission wiring
B Main/sub transmission wiring

In case of heat pump mode

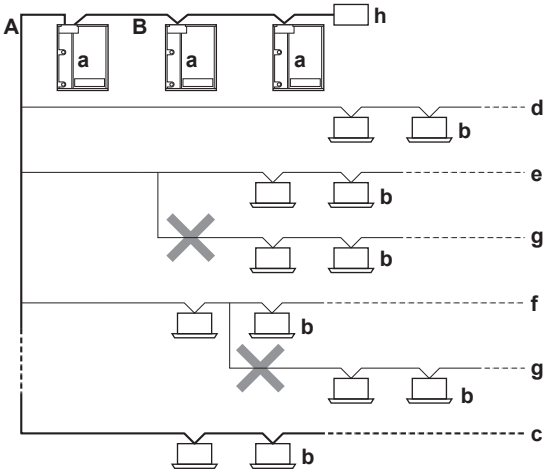

a Outside unit
b Indoor unit
c Main line
d Branch line 1
e Branch line 2
f Branch line 3
g No branch is allowed after branch
h Central user interface (etc...)
A Outside/indoor transmission wiring
B Main/sub transmission wiring

For the above wiring, always use vinyl cords with AWG18 to AWG16 sheath or cables (2-core wires). 3-core wire cables are only allowable for the cooler/heater changeover user interface.

5.8.4 To route and fix the transmission wiring

Transmission wiring can be routed through the front side only. Fix it to the upper mounting hole.

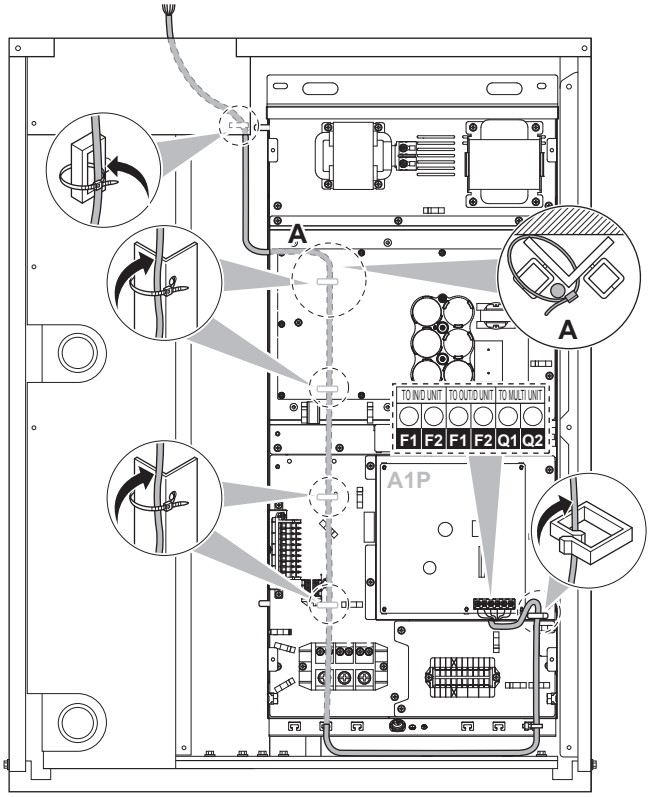

Fix to the indicated plastic brackets (factory installed).

5.8.5 To connect the transmission wiring

The wiring from the indoor units must be connected to the F1/F2 (In-Out) terminals on the PCB in the outside unit.

Tightening torque for the transmission wiring terminal screws:

Screw size	Tightening torque
M3.5 (A1P)	0.59~0.71 ft·lbf (0.8~0.97 N·m)

In case of heat recovery mode

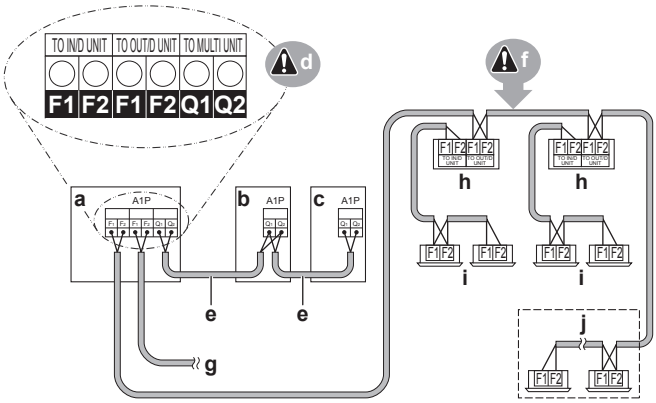

- **a** Unit A (main outside unit)
- **b** Unit B (sub outside unit)
- **c** Unit C (sub outside unit)
- **d** Outside unit PCB (A1P)
- **e** Main/sub transmission (Q1/Q2)
- **f** Outside/indoor transmission (F1/F2)
- **g** Outside unit/other system transmission (F1/F2)
- **h** Branch selector unit
- **i** Indoor unit
- **j** Cooling-only VRV indoor unit

In case of heat pump mode

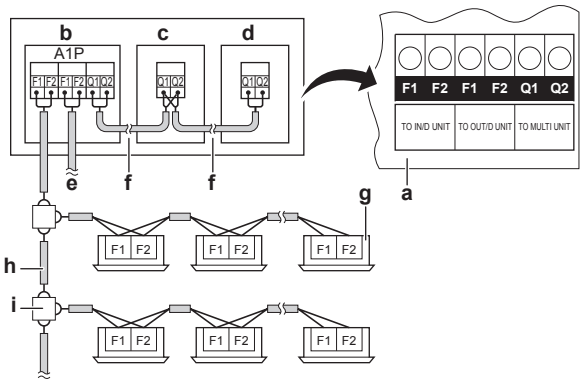

- **a** Outside unit PCB (A1P)
- **b** Unit A (main outside unit)
- **c** Unit B (sub outside unit)
- **d** Unit C (sub outside unit)
- **e** Outside unit/other system transmission (F1/F2)
- **f** Outside-outside unit transmission (Q1/Q2)
- **g** Indoor unit
- **h** Use the conductor of sheathed wire (2 wire) (no polarity)
- **i** Terminal board (field supply)

- The interconnecting wiring between the outside units in the same piping system must be connected to the Q1/Q2 (Out Multi) terminals. Connecting the wires to the F1/F2 terminals results in system malfunction.
- The wiring for the other systems must be connected to the F1/F2 (Out-Out) terminals of the PCB in the outside unit to which the interconnecting wiring for the indoor units is connected.
- The base unit is the outside unit to which the interconnecting wiring for the indoor units is connected.

5.8.6 To finish the transmission wiring

After installing the transmission wires inside the unit, wrap them along with the on-site refrigerant pipes using finishing tape, as shown in figure below.

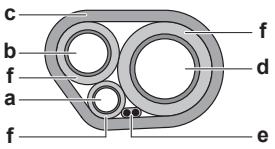

- **a** Liquid pipe
- **b** Gas pipe
- **c** Finishing tape
- **d** High pressure/low pressure gas pipe
- **e** Transmission wiring (F1/F2)
- **f** Insulator

5.8.7 To route and fix the power supply

NOTE

When routing ground wires, secure clearance of 1 inch (25.4 mm) or more away from compressor lead wires. Failure to observe this instruction properly may adversely affect correct operation of other units connected to the same ground.

The power supply wiring can be routed from the front side. Exit the wiring via the upper mounting hole.

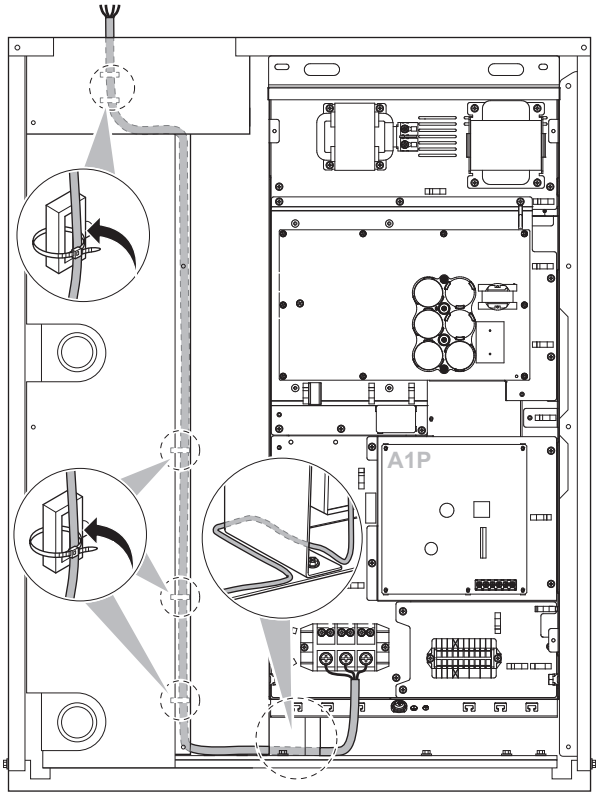

5.8.8 To connect the power supply

NOTE

Never connect the power supply to transmission wiring terminal block. Otherwise the entire system may break down.

CAUTION

When connecting the power supply, the ground connection must be made before the current-carrying connections are established. When disconnecting the power supply, the current-carrying connections must be separated before the ground connection is. The length of the conductors between the power supply stress relief and the terminal block itself must be as such that the current-carrying wires are tautened before the ground wire is in case the power supply is pulled loose from the stress relief.

Tightening torque for the terminal screws:

Screw size	Tightening torque
M8 (Power terminal block)	4.05~5.38 ft·lbf (5.5~7.3 N·m)
M8 (Ground)	

NOTE

Recommendations when connecting the ground wire:

Wire it so that it comes through the cut out section of the cup washer. (An improper ground connection may prevent a good grounding from being achieved.)

The power supply must be clamped to the plastic bracket using field supplied clamp material.

The green and yellow striped wire must be used for grounding only (refer to the figure below).

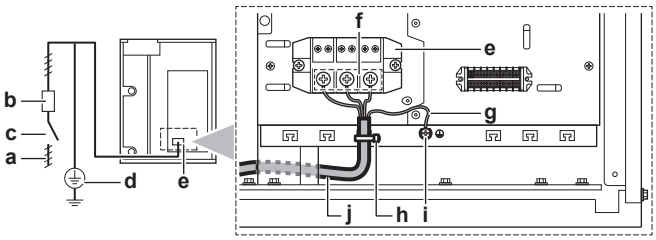

- **a** Power supply (575 V - 3 phase 60 Hz)
- **b** Fuse
- **c** Ground leakage protector
- **d** Ground wire
- **e** Power supply terminal block
- **f** Connect each power wire: RED to L1, WHT to L2 and BLK to L3
- **g** Ground wire (GRN/YLW). When connecting the ground wire, it is recommended to perform curling.
- **h** Clamp the power supply to the bracket using a field supplied clamp to prevent external force being applied to the terminal.
- **i** Cup washer.
- **j** Vinyl tube (accessory)

5.8.9 To connect the conduit

Power supply and transmission wiring: Connect it using conduit mounting plates.

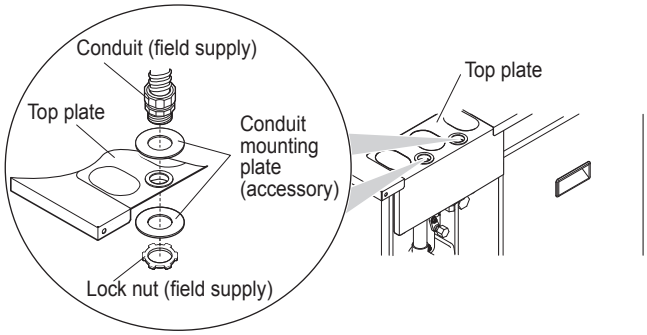

5.8.10 To connect the optional wiring

For the optional wiring use insulated wires of a rated voltage of 250 V or higher and a minimal cross section of AWG16 for single core wires and AWG18 for multicore wires.

Variable water flow

The variable water flow output signal is a low voltage control signal which generates an output of 2~9 V DC depending on the required water flow rate through the plate heat exchanger. For more information, see "4.4.4 Variable water flow rate" on page 17.

NOTE

The maximum output power of the 2~9 V DC output signal is 50 mW. Exceeding this power can result in damage of the system.

Always use shielded cables with a minimal cross section of AWG18 and a length limited to 328 ft (100 m).

The control line of the valve/pump should be connected to the X2M connector in the electrical switchbox. To connect the valve/pump to the outside unit, also provide a separate 12 V DC power supply (to be installed external of outside unit) (with an output power of at least 50 mW) to the X2M connector.

Connect the valve/pump to: X2M terminals 2 and 3.

Connect the power source to X2M terminals 1 and 3 (respect the polarity).

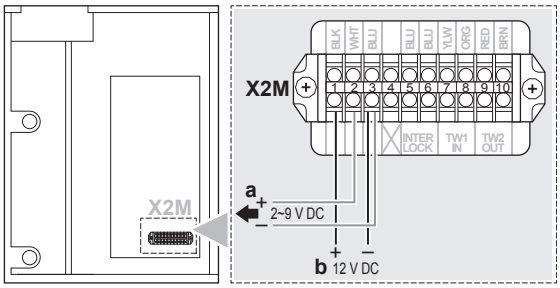

a Valve/pump
b Power supply

NOTE

Make sure to connect a flow switch to your RWEQ*T-Series water-cooled system. Running the system with a flow rate below the minimum requirement can result in damage of the system.

Interlock

It is mandatory to connect a flow switch to the interlock circuit of the outside unit. Running the system with a flow rate below the minimum requirement can result in damage of the system. The flow switch should be installed in the main water circuit between the plate heat exchanger and the closed valve. Select a flow switch contact of at least 15 V DC, 1 mA.

Connect the flow switch to: X2M terminals 5 and 6.
Failure to do so will result in HJ error.

In case of a multi outside unit system, install one or more flow switches depending on the installation of the water system so that water flow is guaranteed under every condition.

NOTE

If the flow switch is installed in a variable water flow system, take into account the inertia of the water flow. If a variable water flow system is used, the flow switch control should be linked to the compressor operation using the multifunction output terminal "b".

Furthermore, when the field setting [2-24-3] is activated, if there is a delay after water pump signal is turned on and flow switch is closed, use a compressor operation signal relay with a time delay and set the time delay accordingly.

Failure to do so will result in unintended "forced thermo off" conditions.

NOTE

In case of two or more flow switches installed with field setting [2-24-3] activated (see "7.2.8 Mode 2: Field setting" on page 37), be sure to use the flow switch that close the contact in 5 seconds after the water pump operation request signal turned on.

Failure to do so will result in malfunction.

Example:

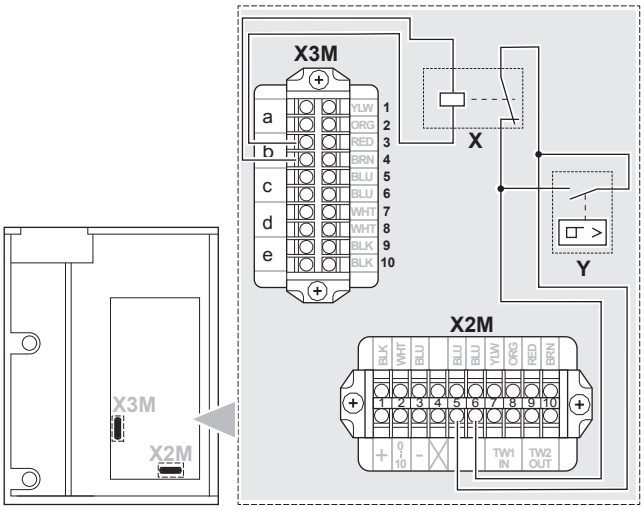

X Relay (close contact when no compressor operation signal) (field supply)
Y Flow switch (open contact when no flow signal) (field supply)

Multifunction outputs

To monitor the outside unit operation or trigger field supplied equipment connected to the outside unit, this RWEQ*T, series is equipped with 5 output contacts.

General contact specifications: 220 V AC, 3 mA-0.5 A.

To connect these output signals, choose the applicable contacts in the X3M terminal in the table below:

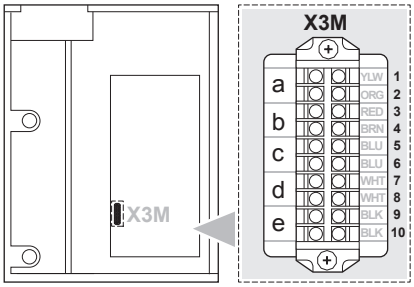

Terminal	Function
a	Error on remote controller
b	Compressor operation
c	Heating operation
d	Cooling operation
e	Valve/Pump operation request

6 Checking of device and installation conditions

Be sure to check the followings.

For those doing electrical work

1. Make sure there is no faulty transmission wiring or loosening of a nut.
   See "5.8.5 To connect the transmission wiring" on page 32.
2. Make sure there is no faulty power wiring or loosening of a nut.
   See "5.8.8 To connect the power supply" on page 33.
3. Has the insulation of the main power circuit deteriorated?
   Measure the insulation and check the insulation is above regular value in accordance with relevant local and national regulations.

For those doing pipe work

1. Make sure piping size is correct.
   See "4.3 Refrigerant pipe size and allowable length" on page 11 and "4.3.3 To select refrigerant branch kits" on page 12.
2. Make sure insulation work is done.
   See "5.5 To insulate the refrigerant piping" on page 25.
3. Make sure there is no faulty refrigerant piping.
   See "5.3 Refrigerant piping" on page 19.

7 Configuration

7.1 Overview: Configuration

This chapter describes what you have to do and know to configure the system after it is installed.

It contains information about:

- Making field settings
- Using the leak detection function

INFORMATION

It is important that all information in this chapter is read sequentially by the installer and that the system is configured as applicable.

DANGER: RISK OF ELECTROCUTION

7.2 Making field settings

7.2.1 About making field settings

INFORMATION

The LEDs and buttons are located in the refrigerant module.

7.2.2 Field setting components

Location of the 7-segment displays, buttons and DIP switches:

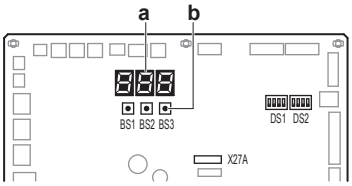

BS1 MODE: For changing the set mode
BS2 SET: For field setting
BS3 RETURN: For field setting
DS1, DS2 DIP switches
a 7-segment displays
b Push buttons

7.2.3 To access the field setting components

It is not required to open the complete electronic component box to access the push buttons on the PCB and read out the 7-segment display(s).

To access you can remove the front inspection cover of the front plate (see figure). Now you can open the inspection cover of the electrical component box front plate (see figure). You can see the three push buttons and the three 7-segment displays and DIP switches.

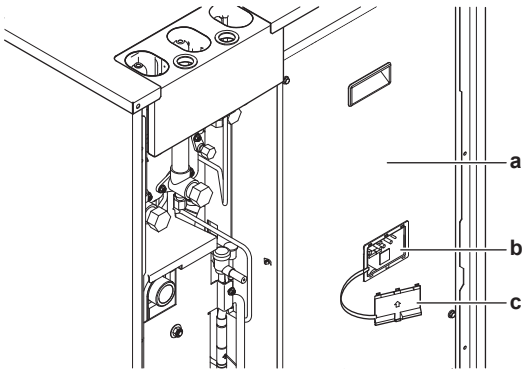

a Switch box cover
b Main PCB with 3 7-segment displays and 3 push buttons
c Access cover

Operate the switches and push buttons with an insulated stick (such as a closed ball-point pen) to avoid touching of live parts.

Make sure to re-attach the inspection cover into the electronic component box cover and to close the front plate's inspection cover after the job is finished. During operation of the unit the front plate of the unit should be attached. Settings are still possible to be made through the inspection opening.

NOTE

Make sure that all outside panels, except for the service cover on the control box, are closed while working.

Close the lid of the control box firmly before turning on the power.

7.2.4 To access mode 1 or 2

Initialization: default situation

NOTE

Be sure to turn on the power 6 hours before operation in order to have power running to the crankcase heater and to protect the compressor.

Turn on the power supply of the outside unit and all indoor units. When the communication between indoor units and outside unit(s) is established and normal, the 7-segment display indication state will be as below (default situation when shipped from factory).

Stage	Display
When turning on the power supply: flashing as indicated. First checks on power supply are executed (1~2 min).	
When no trouble occurs: lighted as indicated (8~10 min).	
Ready for operation: blank display indication as indicated.	

7-segment display indications:

Off
Blinking
On

When above situation cannot be confirmed after 12 min, the malfunction code can be checked on the indoor unit user interface and the outside unit 7-segment display. Solve the malfunction code accordingly. The communication wiring should be checked at first.

Access

BS1 is used to change the mode you want to access.

Access	Action
Mode 1	Push BS1 one time. 7-segment display indication changes to:
Mode 2	Push BS1 for at least 5 seconds. 7-segment display indication changes to:

INFORMATION

If you get confused in the middle of the process, push BS1. Then it returns to idle situation (no indication on 7-segment displays: blank, refer to "7.2.4 To access mode 1 or 2" on page 35.

7.2.5 To use mode 1

Mode 1 is used to set basic settings and to monitor the status of the unit.

What	How
Changing and accessing the setting in mode 1	Once mode 1 is selected (push BS1 one time), you can select the desired setting. It is done by pushing BS2. Accessing the selected setting's value is done by pushing BS3 one time.
To quit and return to the initial status	Press BS1.

Example:

Checking the content of parameter [1-10] (to know how many indoor units are connected to the system).

[A-B]=C in this case defined as: A=1; B=10; C=the value we want to know/monitor:

1. Make sure the 7-segment display indication is as during normal operation (default situation when shipped from factory).
2. Push BS1 one time.

   Result: Mode 1 is accessed:
3. Push BS2 10 times.

   Result: Mode 1 setting 10 is addressed:
4. Push BS3 one time; the value which is returned (depending on the actual field situation), is the amount of indoor units which are connected to the system.

   Result: Mode 1 setting 10 is addressed and selected, return value is monitored information
5. To leave the monitoring function, push BS1 one time.

Result: You will return to the default situation when shipped from factory.

7.2.6 To use mode 2

The main unit should be used to input field settings in mode 2.

Mode 2 is used to set field settings of the outside unit and system.

What	How
Changing and accessing the setting in mode 2	Once mode 2 is selected (push BS1 for more than 5 seconds), you can select the desired setting. It is done by pushing BS2. Accessing the selected setting's value is done by pushing BS3 1 time.
To quit and return to the initial status	Press BS1.
Changing the value of the selected setting in mode 2	▪ Once mode 2 is selected (push BS1 for more than 5 seconds) you can select the desired setting. It is done by pushing BS2. ▪ Accessing the selected setting's value is done by pushing BS3 1 time. ▪ Now BS2 is used to select the required value of the selected setting. ▪ When the required value is selected, you can define the change of value by pushing BS3 1 time. ▪ Press BS3 again to start operation according to the chosen value.

Example:

Checking the content of parameter [2-12].

[A-B]=C in this case defined as: A=2; B=12; C=the value we want to know/change

1. Make sure the 7-segment display indication is as during normal operation (default situation when shipped from factory).
2. Push BS1 for over 5 seconds.

   Result: Mode 2 is accessed:
3. Push BS2 12 times.

   Result: Mode 2 setting 12 is addressed:
4. Push BS3 1 time; the value which is returned (depending on the actual field situation), is the status of the setting. In the case of [2-12], default value is "0", which means the function is not active.

   Result: Mode 2 setting 12 is addressed and selected, return value is the current setting situation.
5. To change the value of the setting, push BS2 till the required value appears on the 7-segment display indication. When achieved, define the setting value by pushing BS3 1 time. To start operation according to the chosen setting, confirm again by pushing BS3.
6. To leave the monitoring function, push BS1 2 times.

Result: You will return to the default situation when shipped from factory.

7.2.7 Mode 1: Monitoring settings

[1-0]

Shows whether the unit you check is a main, sub 1 or sub 2 unit.

Main, sub 1 and sub 2 indications are relevant in multiple module system configurations. The allocation of which outside unit is main, sub 1 or sub 2 are decided by the unit's logic.

The main unit should be used to input field settings in mode 2.

[1-0]	Description
No indication	Undefined situation.
0	Outside unit is main unit.
1	Outside unit is sub 1 unit.
2	Outside unit is sub 2 unit.

[1-2]

Shows the status of power consumption limitation operation.

Power consumption limitation reduces the power consumption of the unit compared to nominal operating conditions.

[1-2]	Description
0	Unit is currently not operating under power consumption limitations.
1	Unit is currently operating under power consumption limitation.

Power consumption limitation can be set in mode 2. There are two methods to activate power consumption limitation of the outside unit system.

- The first method is to enable a forced power consumption limitation by field setting. The unit will always operate at the selected power consumption limitation.
- The second method is to enable power consumption limitation based on an external input. For this operation an optional accessory is required.

[1-5] [1-6]

Shows:

- [1-5]: The current T_e target parameter position.
- [1-6]: The current T_c target parameter position.

[1-13]

Shows the total number of connected outside units (in case of multiple module system).

It can be convenient to check if the total number of outside units which are installed matches the total number of outside units which are recognized by the system. In case there is a mismatch, it is recommended to check the communication wiring path between outside and outside units (Q1/Q2 communication line).

[1-17] [1-18] [1-19]

Shows:

- [1-17]: The latest malfunction code.
- [1-18]: The 2nd last malfunction code.
- [1-19]: The 3rd last malfunction code.

When the latest malfunction codes were reset by accident on an indoor unit user interface, they can be checked again through this monitoring settings.

For the content or reason behind the malfunction code see "10.2 Solving problems based on error codes" on page 45, where most relevant malfunction codes are explained. Detailed information about malfunction codes can be consulted in the service manual of this unit.

7.2.8 Mode 2: Field settings

[2-0]

Cool/Heat selection setting.

Cool/Heat selection setting is used in case the optional Cool/Heat selector (KRC19-26A6) is used.

Depending on the outside unit setup (single outside unit setup or multi outside unit setup), the correct setting should be chosen. More details on how to use the Cool/Heat selector option can be found in the manual of the Cool/Heat selector.

[2-0]	Cool/Heat selection setting
0 (default)	Each individual outside unit can select Cool/Heat operation (by Cool/Heat selector if installed).
1	Master unit decides Cool/Heat operation when outside units are connected in multiple system combination.
2	Sub unit for Cool/Heat operation when outside units are connected in multiple system combination.

[2-8]

T_e target temperature during cooling operation without variable refrigerant temperature (VRT) control.

[2-8]	T_e target
1	37.4°F (3°C)
2 (default)	42.8°F (6°C)
3	44.6°F (7°C)
4	46.4°F (8°C)
5	48.2°F (9°C)
6	50°F (10°C)
7	51.8°F (11°C)

[2-9]

T_c target temperature during heating operation without variable refrigerant temperature (VRT) control.

[2-9]	T_c target
1	105.8°F (41°C)
2	107.6°F (42°C)
3	109.4°F (43°C)
4	111.2°F (44°C)
5	113°F (45°C)
6 (default)	114.8°F (46°C)
7	120.2°F (49°C)

[2-12]

Enable the power consumption limitation via external control adaptor (DTA104A61/62).

If the system needs to be running under power consumption limitation conditions when an external signal is sent to the unit, this setting should be changed. This setting will only be effective when the optional external control adaptor (DTA104A61/62) is installed.

[2-12]	Description
0 (default)	Deactivated.
1	Activated.

[2-20]

Manual additional refrigerant charge.

In order to add the additional refrigerant charge amount in a manual way, following setting should be applied. Further instructions regarding the different ways to charge additional refrigerant into your system can be found in chapter "5.6.2 Charging refrigerant" on page 26.

[2-20]	Description
0 (default)	Deactivated.

[2-20]	Description
1	Activated. To stop the manual additional refrigerant charge operation (when the required additional refrigerant amount is charged), push BS3. If this function was not aborted by pushing BS3, the unit will stop its operation after 30 minutes. If 30 minutes was not sufficient to add the needed refrigerant amount, the function can be reactivated by changing the field setting again.

[2-21]

Refrigerant recovery/vacuuming mode.

In order to achieve a free pathway to reclaim refrigerant out of the system or to remove residual substances or to vacuum the system it is necessary to apply a setting which will open required valves in the refrigerant circuit so the reclaim of refrigerant or vacuuming process can be done properly.

[2-21]	Description
0 (default)	Deactivated.
1	Activated. To stop the refrigerant recovery/vacuuming mode, push BS3. If BS3 is not pushed, the system will remain in refrigerant recovery/ vacuuming mode.

[2-23]

Variable refrigerant temperature (VRT) control

[2-23]	VRT control
0 (default)	Activated both cooling and heating
1	Activated heating only
2	Activated cooling only
3	Deactivated

[2-24]

Water pump/valve control.

To activate the variable flow system, change the setting to the applicable value. Refer to "5.8.10 To connect the optional wiring" - "Interlock" on page 33 for information on selecting and setting flow switch and compressor operation signal relay.

[2-24]	Water pump control
0 (default)	OFF
1	One pump/valve per module; pump/valve on secondary units remain ON when secondary units are OFF
2	One pump/valve per system
3	One pump/valve per module; pump/valve on secondary units are OFF when secondary units are OFF

[2-25]

Water volume minimum setting.

Field setting of lower limit (%) of water volume control.

Set the field setting [2-25] so that the minimum water volume does not go down below 13.2 gpm (50 L /min). When using brine at entering water temperature of 50°F (10°C) or less, set the minimum water flow limit to 21.2 gpm (80 L /min) or more.

[2-25]	Flow % of max flow rate	DC output (V)
—	0% (thermo-off)	2.0
0	10%	2.7
1	20%	3.4
2	30%	4.1
3	40%	4.8
4 (default)	50%	5.5
5	60%	6.2
6	70%	6.9
7	80%	7.6
—	90%	8.3
—	100% (Local max flow rate)	9.0

When the unit stop or thermo-off, the DC output is 2.0 V.

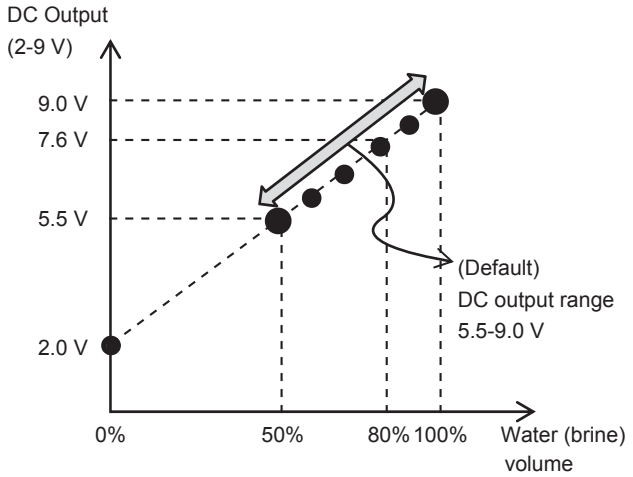

[2-30]

Power consumption limitation level (step 1) via the external control adaptor (DTA104A61/62).

If the system needs to be running under power consumption limitation conditions when an external signal is sent to the unit, this setting defines the level power consumption limitation that will be applied for step 1. The level is according to the table.

[2-30]	Power consumption limitation (approximately)
1	60%
2	65%
3 (default)	70%
4	75%
5	80%
6	85%
7	90%
8	95%

[2-31]

Power consumption limitation level (step 2) via the external control adaptor (DTA104A61/62).

If the system needs to be running under power consumption limitation conditions when an external signal is sent to the unit, this setting defines the level power consumption limitation that will be applied for step 2. The level is according to the table.

[2-31]	Power consumption limitation (approximately)
1 (default)	40%
2	50%
3	55%

[2-32]

Forced, all time, power consumption limitation operation (no external control adaptor is required to perform power consumption limitation).

If the system always needs to be running under power consumption limitation conditions, this setting activates and defines the level power consumption limitation that will be applied continuously. The level is according to the table.

[2-32]	Restriction reference
0 (default)	Function not active.
1	Follows [2-30] setting.
2	Follows [2-31] setting.

[2-34]

Indoor unit fan tap setting.

Indoor units fan speed limitation related to connection capacity for energy saving.

[2-34]	Indoor unit fan tap setting
0 (default)	Fan speed is limited to L tap when indoor units capacity ≥ 130%.
1	In heating mode or simultaneous cool/heat mode, fan speed is limited to L tap when indoor units capacity ≥ 130%.
2	Fan speed follows the setting of remote controllers (not limited by indoor units connection capacity).

[2-42]

Interlock error operation setting.

Abnormal indication is enabled after constant time after a circuit (S3S) of the interlock input opened.

[2-42]	Interlock error operation setting
0 (default)	Display OFF
1	5 minutes
2	10 minutes
3	15 minutes
4	20 minutes
5	25 minutes
6	30 minutes
7	35 minutes

[2-47]

T_e target temperature during heat recovery operation.

[2-47]	T_e target
0 (default)	Auto
1	37.4°F (3°C)
2	42.8°F (6°C)
3	44.6°F (7°C)
4	46.4°F (8°C)
5	48.2°F (9°C)
6	50°F (10°C)
7	51.8°F (11°C)

[2-50]

Antifreeze type setting.

By changing this setting, you can extend the operation range at the antifreeze side of the unit.

- Normal operation range at antifreeze side (default): for use with water as heat source medium.
- Extended operation range at antifreeze side (default): for use with antifreeze as heat source medium.

NOTE

By changing this setting to extended operation type, propylene glycol or ethylene glycol must be used as heat source medium to avoid freeze up of the antifreeze circuit or unit itself (cf. operation range). Do not use water in this case!

[2-50]	Description
0 (default)	Water
2	EG 35%
3	EG 45%
4	EG 30%, PG 30%
5	PG 35%
6	EG 40%, PG 40%
7	PG 45%
8	EG 50%, PG 50%
9	EG 10%, PG 10%
10	EG 15%, PG 15%
11	EG 20%, PG 20%
12	EG 25%, PG 25%

EG: Ethylene Glycol (wt%)
PG: Propylene Glycol (wt%)

[2-57]

Low brine temperature of cooling.

Setting when brine temperature is too low (less than 50°F (10°C)), and high pressure is hard to break out at the time of air conditioner driving.

[2-57]	Low brine temperature of cooling
0 (default)	OFF
1	ON

[2-73]

Heat rejection cancellation control setting.

[2-73]	Description
0 (default)	OFF
1	ON (with priority on cooling capacity)
2	ON (with priority on heat rejection cancellation)

Heat rejection cancellation control can be OFF if the mechanical room is already equipped with a ventilation system or air conditioning system for other facilities.

[2-74]

Heat rejection cancellation setting temperature.

If the unit internal temperature is higher than the zero energy dissipation setting temperature, the zero energy dissipation control will start and cool down the unit.

[2-74]	Description
0	77°F (25°C)
1	80.6°F (27°C)
2	84.2°F (29°C)
3 (default)	87.8°F (31°C)
4	91.4°F (33°C)
5	95°F (35°C)
6	98.6°F (37°C)
7	102.2°F (39°C)

[2-81]

Cooling comfort setting.

This setting is used in conjunction with setting [2-8].

[2-81]	Cooling comfort setting
0	Eco
1 (default)	Mild
2	Quick
3	Powerful

[2-82]

Heating comfort setting.

This setting is used in conjunction with setting [2-9].

[2-82]	Heating comfort setting
0	Eco
1 (default)	Mild
2	Quick
3	Powerful

Heat pump lockout

[2-16]

Heat pump lockout 1.

Heat pump is always locked out when this setting is ON. If the indoor fan control needs to be changed or the auto-backup function is required, refer to the setting [2-37].

[2-16]	Heat pump lockout 1
0 (default)	OFF
1	ON

[2-37]

Heat pump lockout 2.

Heat pump is locked out when this setting and an external input to ABC terminal are made.

[2-37]	Heat pump lockout 2
0 (default)	OFF
1	Mode 1
2	Mode 2

Mode	Description	Actions					
		Field setting	Shorted between	Heating Thermo-on		Heating Thermo-off	
				Heater	Fan	Heater	Fan
Mode 1	Lockout is controlled by an external input to ABC terminal	2-37: Mode 1	A-C	ON	ON (H/L)	OFF	LL (*2)
			B-C				OFF
Mode 2 (*1)		2-37: Mode 2	A-C		LL		LL (*2)
			B-C		OFF		OFF

*1. For a heater which does not need airflow

*2. Depends on the indoor unit field setting 12(22)-3.

Automatic lockout

When this setting is made, the auto-backup function will automatically be activated. This will allow the auxiliary or secondary heat source to be automatically activated in the event of a system failure related to outside units.

Error codes capable of auto-backup are listed in the table below. Please be aware that the error codes that are not listed do not auto-backup in order to protect the unit.

Error code (Auto backup possible)	Error contents
A3	Drain level control system abnormality
E3	Actuation of high pressure switch
E4	Actuation of low pressure sensor
E5	Inverter compressor motor lock
E9	Electronic expansion valve coil abnormality
F3	Discharge pipe temperature abnormality
F9	Branch Selector unit electronic expansion valve abnormality

Error code (Auto backup possible)	Error contents
H9	Outside unit inside air thermistor (R1T) abnormality
HC	Water inlet thermistor (R9T) abnormality
	Water outlet thermistor (R10T) abnormality
J3	Discharge pipe thermistor (R12T) abnormality Compressor body thermistor (R13T) abnormality
J4	Plate heat exchanger gas thermistor (R4T) abnormality
J5	Suction pipe thermistor (R3T) abnormality
J6	Plate heat exchanger liquid thermistor (R7T) abnormality
J7	Receiver outlet liquid pipe thermistor (R6T) abnormality Subcooling heat exchanger outlet liquid pipe thermistor (R8T) abnormality Injection pipe thermistor (R11T) abnormality
J9	Subcooling heat exchanger outlet gas pipe thermistor (R5T) abnormality Exhaust heat cancellation heat exchanger gas pipe thermistor (R2T) abnormality
JA	High pressure sensor abnormality
JC	Low pressure sensor abnormality
L1	Inverter PCB abnormality
L3	Reactor temperature rise abnormality
L4	Inverter radiation fin temperature rise abnormality
L5	Inverter compressor instantaneous overcurrent
L8	Inverter compressor overcurrent
L9	Inverter compressor startup abnormality
LC	Transmission error between inverter PCB and outside unit main PCB

7.2.9 To connect the PC configurator to the outside unit

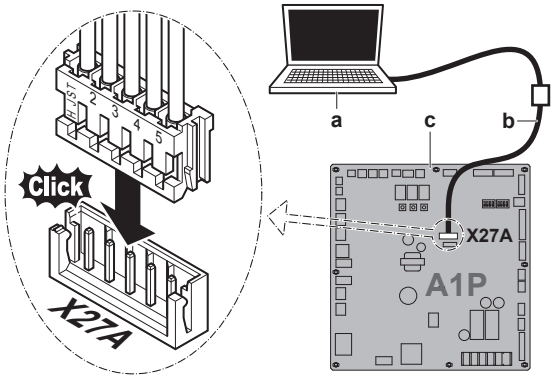

a PC
b Cable (999482P3)
c Outside unit main PCB

8 Commissioning

8.1 Overview: Commissioning

After installation and once the field settings are defined, the installer is obliged to verify correct operation. Therefore a test run must be performed according to the procedures described below.

This chapter describes what you have to do and know to commission the system after it is configured.

Commissioning typically consists of the following stages:

1 Checking the "Checklist before commissioning".
2 Performing a test run.
3 If necessary, correcting errors after abnormal completion of the test run.
4 Operating the system.

8.2 Precautions when commissioning

DANGER: RISK OF ELECTROCUTION

DANGER: RISK OF BURNING

CAUTION

Do not perform the test operation while working on the indoor units.

When performing the test operation, not only the outside unit, but the connected indoor unit will operate as well. Working on an indoor unit while performing a test operation is dangerous.

CAUTION

Do not insert fingers, rods or other objects into the air inlet or outlet. Do not remove the fan guard. When the fan is rotating at high speed, it will cause injury.

INFORMATION

During the first running period of the unit, the required power may be higher than stated on the nameplate of the unit. This phenomenon is caused by the compressor, that needs a continuous run time of 50 hours before reaching smooth operation and stable power consumption.

NOTE

Be sure to turn on the power 6 hours before operation in order to have power running to the crankcase heater and to protect the compressor.

During test operation, the outside unit and the indoor units will start up. Make sure that the preparations of all indoor units are finished (field piping, electrical wiring, air purge, ...). See installation manual of the indoor units for details.

8.3 Checklist before commissioning

After the installation of the unit, first check the following items. Once all below checks are fulfilled, the unit must be closed, only then can the unit be powered up.

☐	You read the complete installation and operation instructions, as described in the **installation manual**.
☐	**Installation** Check that the unit is properly installed, to avoid abnormal noises and vibrations when starting up the unit.

☐	**Field wiring** Be sure that the field wiring has been carried out according to the instructions described in the chapter "5.8 Connecting the electrical wiring" on page 30, according to the wiring diagrams and according to the applicable legislation.
☐	**Power supply voltage** Check the power supply voltage on the local supply panel. The voltage must correspond to the voltage on the nameplate of the unit.
☐	**Ground wiring** Be sure that the ground wires have been connected properly and that the ground terminals are tightened.
☐	**Insulation test of the main power circuit** Using a megger tester for 500 V, check that the insulation resistance of 2 MΩ or more is attained by applying a voltage of 500 V DC between power terminals and ground. Never use the megger tester for the transmission wiring.
☐	**Fuses, circuit breakers, or protection devices** Check that the fuses, circuit breakers, or the locally installed protection devices are of the size and type specified in the chapter "4.5.1 Safety device requirements" on page 18. Be sure that neither a fuse nor a protection device has been bypassed.
☐	**Internal wiring** Visually check the control box and the inside of the unit on loose connections or damaged electrical components.
☐	**Pipe size and pipe insulation** Be sure that correct pipe sizes are installed and that the insulation work is properly executed.
☐	**Stop valves** Be sure that the stop valves are open on both liquid and gas side.
☐	**Damaged equipment** Check the inside of the unit on damaged components or squeezed pipes.
☐	**Refrigerant leak** Check the inside of the unit on refrigerant leakage. If there is a refrigerant leak, try to repair the leak. If the repair is unsuccessful, call your local dealer. Do not touch any refrigerant which has leaked out from refrigerant piping connections. This may result in frostbite.
☐	**Oil leak** Check the compressor for oil leakage. If there is an oil leak, try to repair the leak. If the repairing is unsuccessful, call your local dealer.
☐	**Air inlet/outlet** Check that the air inlet and outlet of the unit is not obstructed by paper sheets, cardboard, or any other material.
☐	**Additional refrigerant charge** The amount of refrigerant to be added to the unit shall be written on the included "Added refrigerant" plate and attached to the rear side of the front cover.
☐	**Installation date and field setting** Be sure to keep record of the installation date on the sticker on the rear of the upper front panel and keep record of the contents of the field setting(s).
☐	Inspect the **water strainer** at the inlet piping of the outside unit. Clean if it is dirty.
☐	The **piping work** has been carried out according to this document and the applicable legislation. Make sure that following components are positioned at their correct places: ▪ water strainer, ▪ air purge valve, ▪ automatic water supply valve, and ▪ expansion tank.
☐	**Water circuit** Make sure that the water circuit is filled.
☐	**Water flow** Make sure that the calculated water flow rate can be reached.
☐	**Power supply voltage** Check the power supply voltage on the local supply panel. The voltage must correspond to the voltage on the nameplate of the unit.

8.4 About test run

The procedure below describes the test operation of the complete system. This operation checks and judges following items:

- Check for incorrect wiring (communication check with indoor units).
- Check of the stop valves opening.
- Judgment of piping length.
- Make sure to carry out the system test operation after the first installation. Otherwise, the malfunction code U3 will be displayed on the user interface and normal operation or individual indoor unit test run cannot be carried out.
- Abnormalities on indoor units cannot be checked for each unit separately. After the test operation is finished, check the indoor units one by one by performing a normal operation using the user interface. Refer to the indoor unit installation manual for more details concerning the individual test run.

INFORMATION

- It may take 10 minutes to achieve a uniform refrigerant state before the compressor starts.
- During the test operation, the refrigerant running sound or the magnetic sound of a solenoid valve may become loud and the display indication may change. These are not malfunctions.

8.5 To perform a test run

1. Close all front panels in order to not let it be the cause of misjudgment (except the control box inspection opening service cover).
2. Make sure all field settings you want are set; see "7.2 Making field settings" on page 35.
3. Turn ON the power to the outside unit and the connected indoor units.

NOTE

Be sure to turn on the power 6 hours before operation in order to have power running to the crankcase heater and to protect the compressor.

4 Make sure the default (idle) situation is existing; see "7.2.4 To access mode 1 or 2" on page 35. Push BS2 for 5 seconds or more. The unit will start test operation.

Result: The test operation is automatically carried out, the outside unit display will indicate "t01" and the indication "test operation" and "central control" will display on the user interface of indoor units.

Steps during the automatic system test run procedure:

Step	Description
t01	Control before start up (pressure equalization)
t02	Cooling start up control
t03	Cooling stable condition
t04	Communication check, gas stop valve check
t05	Liquid stop valve check
t06	Pipe length check
t07	Discharge gas stop valve check
t08	Pump down operation
t09	Unit stop

Note: During the test operation, it is not possible to stop the unit operation from a user interface. To abort the operation, press BS3. The unit will stop after ±30 seconds.

5 Check the test operation results on the outside unit 7-segment display.

Completion	Description
Normal completion	No indication on the 7-segment display (idle).
Abnormal completion	Indication of malfunction code on the 7-segment display. Refer to "8.6 Correcting after abnormal completion of the test run" on page 43 to take actions for correcting the abnormality. When the test operation is fully completed, normal operation will be possible after 5 minutes.

8.6 Correcting after abnormal completion of the test run

The test operation is only completed if there is no malfunction code displayed on the user interface or outside unit 7-segment display. In case of a displayed malfunction code, perform correcting actions as explained in the malfunction code table. Carry out the test operation again and confirm that the abnormality is properly corrected.

INFORMATION

Refer to the installation manual of the indoor unit for detailed malfunction codes related to indoor units.

8.7 Operating the unit

Once the unit is installed and test operation of outside unit and indoor units is finished, the operation of the system can start.

For operating the indoor unit, the user interface of the indoor unit should be switched ON. Refer to the indoor unit operation manual for more details.

9 Maintenance and service

NOTE

Maintenance must be done by an authorized installer or service agent.

We recommend to do maintenance at least once a year. However, applicable legislation might require shorter maintenance intervals.

9.1 Overview: Maintenance and service

This chapter contains information about:

- Preventing electrical hazards when maintaining and servicing the system
- Cleaning the plate heat exchanger
- The refrigerant recovery operation

9.2 Maintenance safety precautions

DANGER: RISK OF ELECTROCUTION

DANGER: RISK OF BURNING

NOTE: Risk of electrostatic discharge

Before performing any maintenance or service work, touch a metal part of the unit in order to eliminate static electricity and to protect the PCB.

9.2.1 To prevent electrical hazards

When performing service to inverter equipment:

1 Do not open the electrical component box cover for 10 minutes after the power supply is turned off.

2 Measure the voltage between terminals on the terminal block for power supply with a tester and confirm that the power supply is shut off. In addition, measure points as shown in the figure, with a tester and confirm that the voltage of the capacitor in the main circuit is less than 50 V DC.

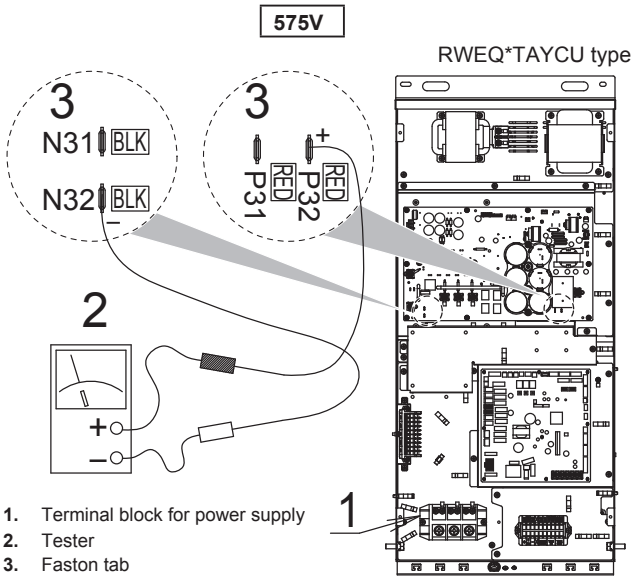

1. Terminal block for power supply
2. Tester
3. Faston tab

3 To prevent damaging the PCB, touch a non-coated metal part to eliminate static electricity before pulling out or plugging in connectors.

9.3 Maintenance of the plate heat exchanger

The performance of a plate heat exchanger may decline due to scale accumulation. It may be damaged by freezing due to the decrease in the flow rate. For this reason, it is necessary to carry out programmed maintenance at regular intervals in order to prevent scale.

9.3.1 Daily service and maintenance

1 Management of water quality

The plate-type heat exchanger has a structure that does not permit dismantling and cleaning, or replacing any parts. Please pay attention carefully to the quality of water to be used for the plate-type heat exchanger in order to prevent corrosion and sticking of scale.
The water to be used for the plate-type heat exchanger should have at least the quality as specified in the table of "4.4.1 Water quality requirements" on page 15.
When using any corrosion prevention agent, scale depressant agent, etc., such agent should have no corrosive features against stainless steel and copper.

2 Management of condenser water flow rate

If the condenser water flow rate is not enough, it will result in freezing damage to the plate-type heat exchanger. Check for any clogging of the strainer, any air being caught, any reduction in the flow rate due to failure of the circulation pump by measuring the temperature and pressure differences at the inlet and outlet ports of the plate-type heat exchanger. If the aged difference in the temperature or pressure has increased beyond the proper range, the flow rate should have decreased. Stop the operation and remove the cause before restarting the operation.

3 Steps to be taken if a freeze-protection device is activated

If the freeze-protection device is activated during operation, be sure to remove the cause before restarting the operation. If the freeze-protection device has been once activated, a partial freezing has already occurred. If you restart the operation without removing the cause, the plate-type heat exchanger will be closed and the ice cannot be melted, and in addition, the freezing process will be repeated, resulting in any damage to the plate-type heat exchanger, and this can lead to refrigerant leaking or water entering the refrigerant circuit.

9.3.2 Maintenance of plate-type heat exchanger

The performance of a plate-type heat exchanger may decline due to scale accumulation. It may be damaged by freezing due to the drop of flow rate. For this reason, it is necessary to carry out programmed maintenances at a regular interval in order to prevent the scale from being generated.

1 Before entering the season for use, carry out the following inspections:

1) Conduct a water quality test and make sure that it is within the standard.
2) Clean the strainer.
3) Make sure that the flow rate is correct.
4) Make sure that the operational conditions (pressure, flow rate, outlet temperature, etc.) are normal.

2 Because the plate-type heat exchanger has a structure which does not permit disassembling and cleaning, follow the following procedures for cleaning:

1) For maintenance purposes it is required to provide for a connection port on the water inlet and on the water outlet. You must connect a circulation pump in between these 2 connection ports when cleaning the plate-type heat exchanger with chemicals.
For cleaning the scale in the plate-type heat exchanger it is recommended to use a solution with 5% diluted formic, citric, oxalic, acetic or phosphoric acid.
Never use hydrochloric, sulfuric or nitric acid because such solutions have a strong corrosive feature.
2) Make sure to provide for a stop valve in front of that inlet water pipe connection port and for a stop valve after the outlet water pipe connection port.
3) Connect the piping for circulation of cleaning chemicals to the inlet and outlet piping of plate-type heat exchanger. Fill the cleaning solution of 122-144°F (50-62°C) for a while in the plate-type heat exchanger. Then, circulate the cleaning solution by a pump for 2-5 hours.
The time for cleaning depends on the temperature of cleaning solution or the degree of scale accumulation. Therefore, please watch the change of the dirtiness (color) of cleaning solution to determine the level of removal of scale.
4) After circulating the cleaning solution, discharge the solution from the plate-type heat exchanger, fill the heat exchanger with a solution of 1-2% sodium hydroxide (NaOH) or sodium bicarbonate ($NaHCO_3$). Circulate this solution for 15-20 minutes for neutralization purpose.
5) After the process of neutralization has been completed, rinse the inner part of the plate-type heat exchanger with care using fresh and clean water.
6) When using any cleaning agent sold in the market, check in advance that such agent has no corrosive features against stainless steel and copper.
7) For details of cleaning method, ask the manufacturer of related cleaning agent.

3 After cleaning has been completed, make sure that the unit can be operated in a normal fashion.

9.4 About service mode operation

Refrigerant recovery operation/vacuuming operation is possible by applying setting [2-21]. Refer to "7.2 Making field settings" on page 35 for details how to set mode 2.

When vacuuming/recovery mode is used, check very carefully what should be vacuumed/recovered before starting. See installation manual of the indoor unit for more information about vacuuming and recovery.

9.4.1 To use vacuum mode

1. When the unit is at standstill, set the unit in [2-21]=1.

   Result: When confirmed, the indoor and outside unit expansion valves will fully open. At that moment the 7-segment display indication=E01 and the user interface of all indoor units indicate “test operation) and “central control” and the operation will be prohibited.
2. Evacuate the system with a vacuum pump.
3. Press BS3 to stop vacuuming mode.

9.4.2 To recover refrigerant

This should be done by a refrigerant reclaimer. Follow the same procedure as for vacuuming method.

DANGER: RISK OF EXPLOSION

Pump down – Refrigerant leakage. If you want to pump down the system, and there is a leakage in the refrigerant circuit:

- Do NOT use the unit's automatic pump down function, with which you can collect all refrigerant from the system into the outside unit. **Possible consequence:** Self-combustion and explosion of the compressor because of air going into the operating compressor.
- Use a separate recovery system so that the unit's compressor does NOT have to operate.

NOTE

Make sure to NOT recover any oil while recovering refrigerant. **Example:** By using an oil separator.

10 Troubleshooting

10.1 Overview: Troubleshooting

This chapter describes what you have to do in case of problems.

It contains information about:

- Solving problems based on error codes

10.2 Solving problems based on error codes

In case of a displayed malfunction code, perform correcting actions as explained in the malfunction code table.

After correcting the abnormality, press BS3 to reset the malfunction code and retry operation.

The malfunction code which is displayed on the outside unit will indicate a main malfunction code and a sub code. The sub code indicates more detailed information about the malfunction code. The malfunction code will be displayed intermittent.

Example:

Code	Example
Main code	E3
Sub code	-01

With an interval of 1 second, the display will switch between main code and sub code.

10.3 Error codes: Overview

Malfunction code		Contents	Solution
Main code	Sub code Master/sub 1/sub 2		
E3	01/03/05	▪ High pressure switch is activated. (S1PH)-A1P (X3A) ▪ High pressure switch connectors are detached. -A1P (X3A)	▪ Check stop valves situation or abnormalities in (field) piping or waterflow. ▪ Securely connect each connector. Refer to the wiring diagram attached to the back of the control box cover.
	02/04/06	▪ Stop valves are closed. ▪ Refrigerant overcharge.	▪ Open stop valves. ▪ Check refrigerant amount and recharge.
E4	01/02/03	Low pressure malfunction: ▪ Stop valves are closed. ▪ Refrigerant shortage. ▪ Indoor unit malfunction	▪ Open stop valves. ▪ Check refrigerant amount and recharge. ▪ Check the user interface's display or transmission wiring between the outside unit and the indoor unit.
E9	01/05/08	Electronic expansion valve malfunction (Y1E)-A1P (X21A)	Check connection on printed circuit board or actuator.
	03/06/09	Electronic expansion valve malfunction (Y2E)-A1P (X22A)	Check connection on printed circuit board or actuator.
	04/07/10	Electronic expansion valve malfunction (Y3E)-A1P (X25A)	Check connection on printed circuit board or actuator.
F3	01/03/05	Discharge temperature too high (R12T): ▪ Stop valves are closed. ▪ Refrigerant shortage.	▪ Open stop valves. ▪ Check refrigerant amount and recharge.
	20/21/22	Compressor casing temperature too high (R13T): ▪ Stop valves are closed. ▪ Refrigerant shortage.	▪ Open stop valves. ▪ Check refrigerant amount and recharge.
F6	02	▪ Stop valves are closed. ▪ Refrigerant overcharge.	▪ Open stop valves. ▪ Check refrigerant amount and recharge.
H9	01/02/03	Temperature sensor malfunction (R1T)-A4P (X11A)	Check connection on printed circuit board or actuator.
HJ	01/02/03	Water system malfunction	▪ Check water pump and waterflow. ▪ Check flow switch interlock connection (X2M terminals 5, 6).
J3	16/22/28 17/23/29 56/57/58	Temperature sensor malfunction (R12T)-A1P (X19A)	Check connection on printed circuit board or actuator.
	47/49/51 48/50/52	Temperature sensor malfunction (R13T)-A1P (X19A)	Check connection on printed circuit board or actuator.
J5	01/03/05	Temperature sensor malfunction (R3T)-A1P (X30A)	Check connection on printed circuit board or actuator.
J6	01/02/03	Temperature sensor malfunction (R7T)-A1P (X30A)	Check connection on printed circuit board or actuator.
J7	01/02/03	Temperature sensor malfunction (R6T)-A1P (X30A)	Check connection on printed circuit board or actuator.
	06/07/08	Temperature sensor malfunction (R8T)-A1P (X29A)	Check connection on printed circuit board or actuator.
	18/19/20	Temperature sensor malfunction (R11T)-A1P (X18A)	Check connection on printed circuit board or actuator.
J9	01/02/03	Temperature sensor malfunction (R5T)-A1P (X30A)	Check connection on printed circuit board or actuator.
	17/18/19	Temperature sensor malfunction (R2T)-A4P (X12A)	Check connection on printed circuit board or actuator.
JA	01/02/03	High pressure sensor malfunction (S1NPH)-A1P (X32A)	Check connection on printed circuit board or actuator.
JC	01/02/03	Low pressure sensor malfunction (S1NPL)-A1P (X31A)	Check connection on printed circuit board or actuator.
LC	01/06/08	Transmission trouble. A3P (X6A)-A1P (X28A)	Check connection.
P1	01/02/03	Unbalanced power supply voltage.	Check if power supply is within the range.
U1	01/05/07	No power supplied to outside unit or indoor unit (Reverse phase/open phase).	Check if the power supply wiring for the outside unit or indoor unit is correctly connected, and correct if necessary.

Malfunction code		Contents	Solution
Main code	Sub code Master/sub 1/sub 2		
U2	01/08/11	Voltage power shortage.	▪ Check if power supply is within the range. ▪ Correct phase order.
	02/09/12	Reversed or open power supply phase.	▪ Check if power supply is within the range. ▪ Correct phase order.
U3	01	System test run not yet executed (system operation not possible).	Execute system test run.
	05	Test run aborted.	Re-execute the test run.
	06		
	07	Test run aborted due to communication issues.	Check the communication wires and re-execute the test run.
	08		
U4	01	Faulty wiring to Q1/Q2 or indoor- outside.	Connect transmission wiring of indoor units to “TO IN/D UNIT (F1, F2)” and transmission wiring of other outside units to “TO OUT/D UNIT (F1, F2)”.
	03	Malfunction of connected indoor unit.	Check the malfunction code of indoor unit and resolve it.
U7	01	Faulty wiring to Q1/Q2 or indoor- outside.	Connect transmission wiring of indoor units to “TO IN/D UNIT (F1, F2)” and transmission wiring of other outside units to “TO OUT/D UNIT (F1, F2)”.
	02		
	03		
U9	01	▪ System mismatch. Wrong type of indoor units combined (R407C, Mini-split, etc). ▪ Indoor unit malfunction.	Check if other indoor units have malfunction and confirm indoor unit mix is allowed.
UA	18	Connection malfunction over indoor units or type mismatch (R407C, Mini-split, etc).	Check if other indoor units have malfunction and confirm indoor unit mix is allowed.
	20	Wrong combination of outside units (different series (e.g. RWEQ and RWEYQ), or different type (e.g. P type and T type)).	Correct the units combination.
	27	Assembly defect of indoor and outside units (e.g. different models, number of units or part numbers, or different series are mixed).	▪ Check and modify the number of indoor units that are connected. ▪ Check the type of refrigerant for indoor and outside units, and replace them with adaptable indoor/ outside units in the case of inconsistency.
UH	01	Auto address malfunction (inconsistency)	Check if transmission wired unit amount matches with powered unit amount (by monitor mode) or wait till initialization is finished.
UF	01	▪ Auto address malfunction (inconsistency) ▪ Stop valves closed.	▪ Check if transmission wired unit amount matches with powered unit amount (by monitor mode) or wait till initialization is finished. ▪ Open stop valves.

Refer to service manual for full list of error codes.

11 Technical data

11.1 Overview: Technical data

This chapter contains information about:

- Service space
- Piping diagram
- Wiring diagram

11.2 Service space: Outside unit

Make sure the space around the unit is adequate for servicing and the minimum space for ventilation is available (refer to the figure below).

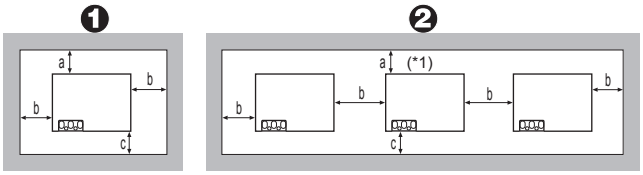

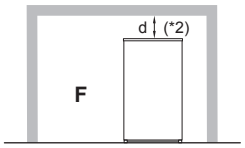

a ≥19-11/16 inch (500 mm)
b ≥13/16 inch (20 mm)
c ≥35-7/16 inch (900 mm)
d ≥11-13/16 inch (300 mm)

F Front side

*1 This ventilation space is necessary when heat rejection cancellation is not active.

*2 This space is necessary when refrigerant piping is connected to the top of the unit.

INFORMATION

Further specifications can be found in the technical engineering data.

11.3 Piping diagram: Outside unit

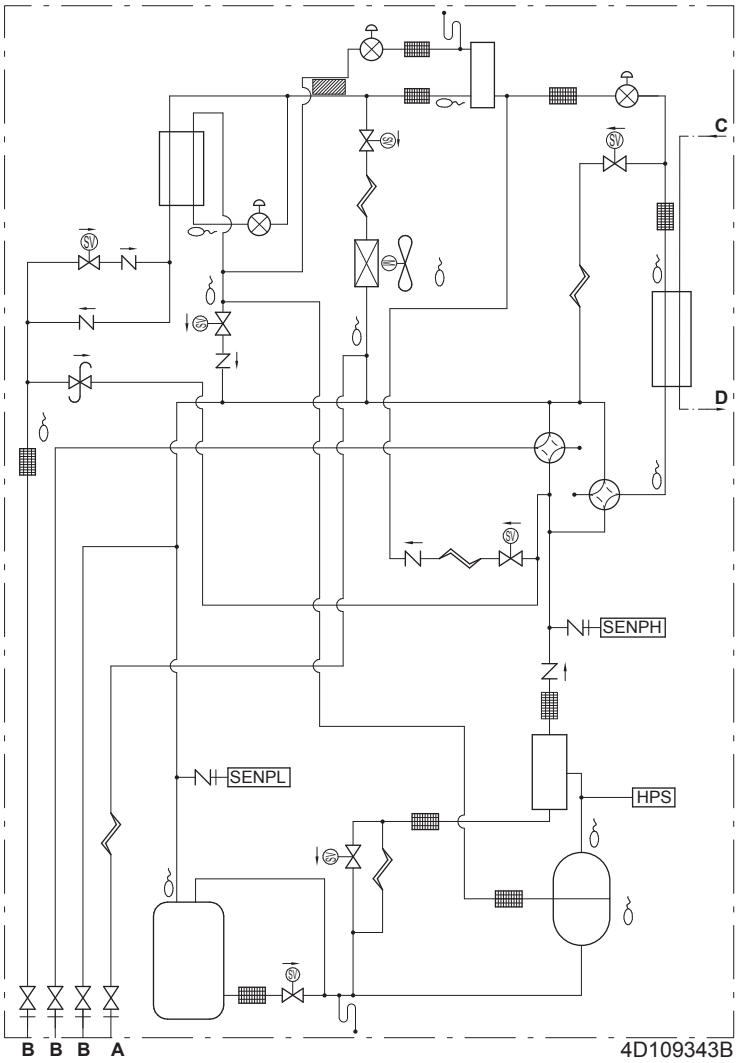

A	Charge port
B	Stop valve (with service port Ø0.32 inch (8.1 mm) flare connection)
C	Cooling water inlet
D	Cooling water outlet
	Charge port / Service port
	Filter
	Check valve
	Pressure relief valve
	Solenoid valve
	Capillary tube
	Electronic expansion valve
	4-way valve
	Propeller fan
	Port (for sensor)
	Low/high pressure sensor
	High pressure switch
	Oil separator
	Accumulator
	Compressor
	Double tube heat exchanger / Plate heat exchanger
	Liquid receiver
	Thermistor
	Fusible plug

11.4 Wiring diagram: Outside unit

The wiring diagram is delivered with the unit, located at the inside of the service cover.

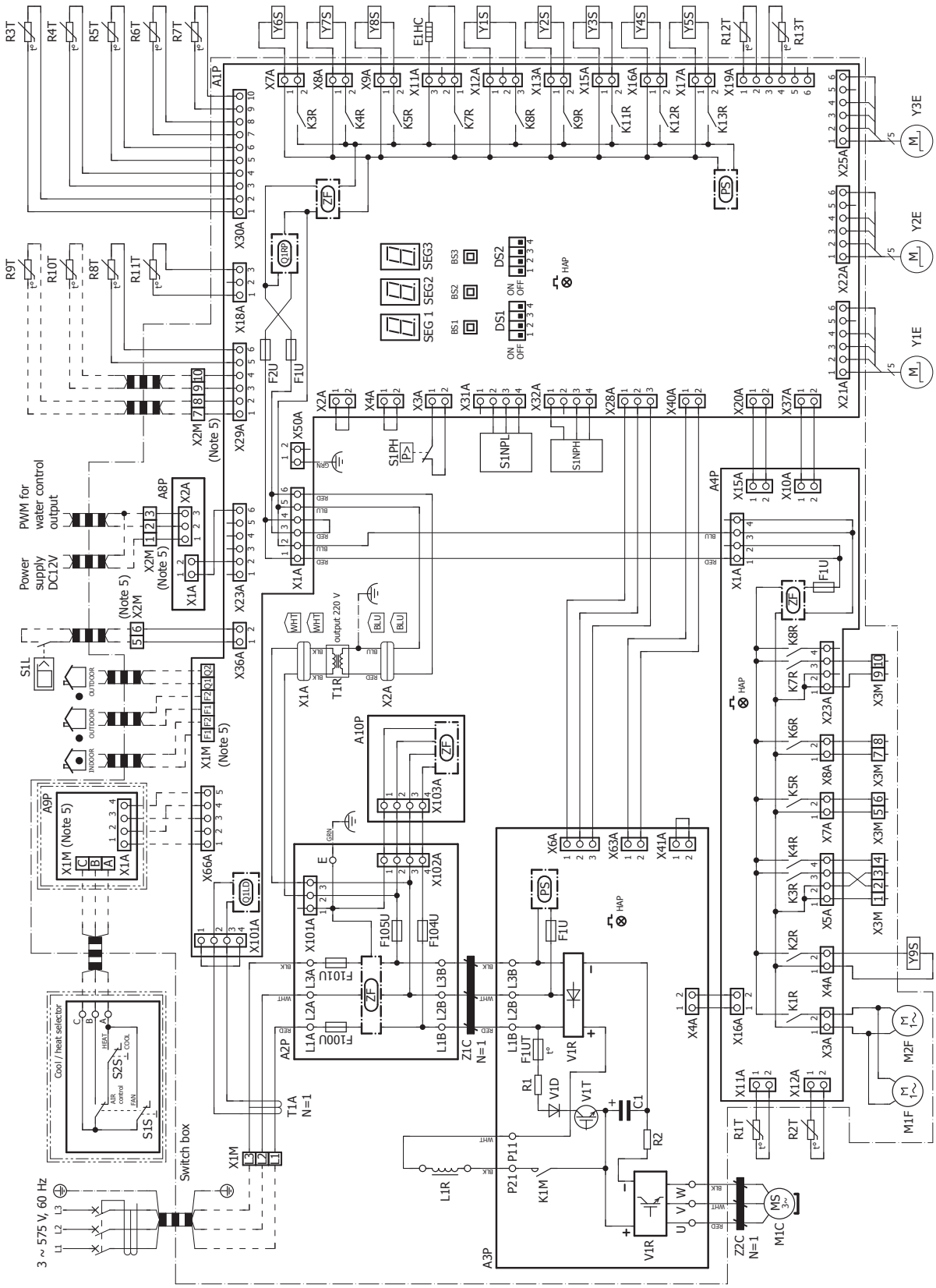

NOTES to go through before starting the unit

X1M : Main terminal

15 : Wire number 15

: Field wiring

1 : Several wiring possibilities

: Protective ground

: Noiseless ground

* : * = Connector color for component

: Option

: Wiring depending on model

: switch box

: PCB

NOTES:
1. Refer to the installation or service manual on how to use the BS1 ~ BS3 push buttons and the DS1~DS2 switches.
2. When operating, do not short-circuit protection device S1PH.
3. For connection to indoor-outdoor transmission F1-F2 wiring, outdoor-outdoor transmission F1-F2, outdoor-outdoor transmission Q1-Q2, refer to "service manual".
4. Colors: BLK:Black, RED:Red, BLU:Blue, WHT:White, GRN:Green.
5. Class 2 wire.

POSITION IN SWITCH BOX

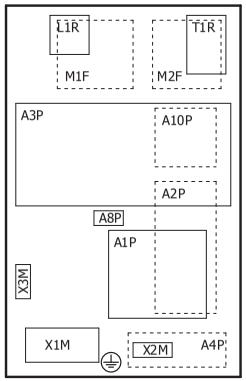

LEGEND

Translation can be found in the installation manual.

Part n°		Description
A1P		main PCB
A2P		noise filter PCB (main)
A3P		inverter PCB
A4P		SUB PCB
A8P		adapter PCB
A9P	*	cool/heat selector PCB
A10P		noise filter PCB (sub)
BS* (A1P)		push buttons (mode , set, return)
C* (A3P)		capacitor
DS* (A1P)		dipswitch
E1HC		crankcase heater
F1U,F2U (A1P)		fuse
F1U (A3P)		fuse
F1U (A4P)		fuse
F1UT (A3P)		thermal fuse
F100U (A2P)		fuse
F101U (A2P)		fuse
F104U (A2P)		fuse
F105U (A2P)		fuse
HAP (A1P, A3P,A4P)		running LED (service monitor-green)
K1M (A3P)		magnetic contactor
K*R (A*P)		magnetic relay
L*R		reactor
M1C		motor (compressor)
M*F		motor (fan)
PS (A1P,A3P)		power supply

Part n°		Description
Q1LD (A1P)		field earth current detector
Q1RP (A1P)		phase reversal detection circuit
R1 (A3P)		current limiting resistor
R2 (A3P)		shunt resistor
R*T		thermistor
R9T,R10T	#	thermistor for inlet/outlet water temp.
S1L	#	flow switch
S1NPH		high pressure sensor
S1NPL		low pressure sensor
S1PH		high pressure switch (discharge)
S1S	*	selector switch (fan/cool-heat)
S2S	*	selector switch (cool/heat)
SEG* (A1P)		7-segment display
T1A		leakage current detection sensor
T1R		transformer
V1D (A3P)		diode module
V1R (A3P)		power integrated module
V1T (A3P)		transistor
X66A		connector (remote switching cool/heat selector)
X*A		connector
X*M		terminal block
Y*E		electronic expansion valve
Y*S		solenoïd valve
Z*C		noise filter (ferrit core)
Z*F (A1P,A2P ,A4P,A10P)		noise filter

* : optional # : field supply

DAIKIN MANUFACTURING COMPANY, L.P.
5151 San Felipe St., Suite 500, Houston, TX77056
www.daikincomfort.com

4P540122-1B 2018.11